2013 PROPOSED CHANGES TO THE INTERNATIONAL ENERGY CONSERVATION CODE-RESIDENTIAL PROVISIONS

INTERNATIONAL COMMERCIAL ENERGY CONSERVATION CODE - RESIDENTIAL COMMITTEE

Paul Armstrong, PE, CBO - *Chair*
CSG Regional Manager, So Cal
CSG Consultants
Santa Ana, CA

Donald J. White – *Vice Chair*
Plans Examiner
City of Las Vegas, Nevada
Las Vegas, NV

Matt Belcher
Rep: National Association of Home Builders
President
Belcher Homes – Belcher Realty & Investment Co., Inc.
Wildwood, MO

Dean Potter
Rep: National Association of Home Builders
VP, Quality Assurance Processes
K. Hovnanian Homes
Red Bank, NJ

Robert D. Ross
Rep: National Association of Home Builders G&R Construction Services LLC
Granger, TX

Stephen Turchen
Engineer III
Fairfax County VA, Department of Public Works & Environmental Services
Fairfax, VA

John Umphress
Green Building & Sustainability Consultant, Sr.
Austin Energy Green Building
Austin, TX

Donald J. Vigneau, AIA
Building Energy Codes Project Manager
Northeast Energy Efficiency Partnerships, Inc.
Lexington, MA

David W. Ware
Energy Specialist
California Energy Commission
Sacramento, CA

Staff Secretariat:
David Bowman, PE
Manager, Codes
International Code Council
Chicago District Office
4051 W. Flossmoor Rd
Country Club Hills, IL 60478
888-422-7233 x4323 Fax: 708-799-0320
Dbowman@iccafe.org

TENTATIVE ORDER OF DISCUSSION
2013 PROPOSED CHANGES TO THE
INTERNATIONAL ENERGY CONSERVATION CODE – RESIDENTIAL

The following is the tentative order in which the proposed changes to the code will be discussed at the public hearings. Proposed changes which impact the same subject have been grouped to permit consideration in consecutive changes.

Proposed change numbers that are indented are those which are being heard out of numerical order. Indentation **does not** necessarily indicate that one change is related to another. Proposed changes may be grouped for purposes of discussion at the hearing at the discretion of the chair. Note that some Residential Energy Changes may not be included on this list as they are being heard by another committee. Please consult the Cross Index of Proposed Changes. Note also that RE1-RE9 are moved to later in the hearing order to all grouping consideration of proposed changes to Chapters 1 and 3 near the beginning of the the consideration of Chapters 1 and 3 of the IECC-Commercial Provisions.

RE10-13
RE11-13
RE12-13
RE13-13
RE14-13
RE15-13
RE16-13
    RE5-13
RE17-13
RE18-13
    CE47-13 Part II
    CE48-13 Part II
RE19-13
RE20-13
RE21-13
RE22-13
RE23-13
RE24-13
RE25-13
RE26-13
RE27-13
RE28-13
RE29-13
RE30-13
    RE6-13
RE31-13
RE32-13
RE33-13
RE34-13
RE35-13
RE36-13
RE37-13
RE38-13
RE39-13
    CE52-13 Part II
RE40-13
RE41-13
RE42-13
    RE191-13
RE43-13
RE44-13
RE45-13
RE46-13
RE47-13
RE48-13
RE49-13
RE50-13
    CE84-13 Part II
RE51-13
RE52-13
RE53-13
RE54-13
RE55-13
RE56-13
RE57-13
RE58-13
RE59-13
    CE127-13 Part II
RE60-13
RE61-13
RE62-13
RE63-13
    CE58-13 Part II
    CE59-13 Part II
RE64-13
    CE161-13 Part II
RE65-13
RE66-13
    CE160-13 Part II
RE67-13
RE68-13
RE69-13
RE70-13
RE71-13
RE72-13
RE73-13
RE74-13
RE75-13
RE76-13
RE77-13
RE78-13
RE79-13
RE80-13
RE81-13
RE82-13
RE83-13
RE84-13
RE85-13
RE86-13
RE87-13
    CE46-13 Part II
RE88-13
RE89-13
RE90-13
RE91-13
RE92-13
    CE177-13 Part II
RE93-13
RE94-13
RE95-13
RE96-13
RE97-13
RE98-13
RE99-13
RE100-13
RE101-13
RE102-13
RE103-13
RE104-13
RE105-13
RE106-13
RE107-13
RE108-13
RE109-13
RE110-13
RE111-13
RE112-13
RE113-13
RE114-13
RE115-13
RE116-13
RE117-13
RE118-13
RE119-13
RE120-13
    RE230-13 Part II
RE121-13
RE122-13
RE123-13
    CE49-13 Part III
    CE280-13 Part III
    CE283-13 Part II
RE124-13
RE125-13
RE126-13
RE127-13
RE128-13
RE129-13
RE130-13
RE131-13
RE132-13
RE133-13
    CE273-13 Part III
    CE273-13 Part IV
RE134-13
RE135-13
RE136-13
RE137-13
RE138-13
RE139-13
    RE192-13
RE140-13
RE141-13
RE142-13
RE143-13
RE144-13
    SP19-13 Part III
RE145-13
RE146-13
RE147-13
    RE193-13
RE148-13
RE149-13
RE150-13
    CE285-13 Part II
RE151-13
RE152-13
RE153-13

RE154-13
RE155-13
RE156-13
RE157-13
RE158-13
RE159-13
RE160-13
RE161-13
RE162-13
RE163-13
RE164-13
RE165-13
RE166-13
RE167-13
RE168-13
RE169-13
RE170-13
RE171-13
RE172-13
RE173-13
RE174-13
RE175-13
RE176-13
RE177-13
RE178-13
RE179-13
RE180-13
RE181-13
RE182-13
RE183-13
RE184-13
RE185-13
RE186-13
RE187-13
RE188-13
RE189-13
RE190-13
    CE4-13 Part II
    ADM1-13 Part III
    ADM55-13 Part II
CE1-13 Part II
CE2-13 Part II
RE1-13
CE6-13 Part II
CE7-13 Part II
CE8-13 Part II
CE9-13 Part II
CE10-13 Part II
CE11-13 Part II
CE15-13 Part II
CE16-13 Part II
    ADM51-13 Part III
    ADM52-13 Part III
    ADM60-13 Part III
    CE3-13 Part II
CE19-13 Part II
CE20-13 Part II
    CE51-13 Part II
CE22-13 Part II
CE23-13 Part II
CE28-13 Part II
CE29-13 Part II
CE30-13 Part II
CE31-13 Part II
CE32-13 Part II
CE33-13 Part II
CE34-13 Part II
    RE2-13
    ADM40-13 Part III
    ADM41-13 Part III
CE35-13 Part II
    RE3-13
    RE4-13
CE37-13 Part II
    ADM53-13 Part III
CE38-13 Part II
    ADM30-13 Part III
    ADM47-13 Part III
CE39-13 Part II
CE40-13 Part II
CE41-13 Part II
    ADM57-13 Part III
CE43-13 Part II
CE44-13 Part II
    ADM22-13 Part III
CE47-13 Part II
CE48-13 Part II
CE50-13 Part II
CE61-13 Part II
CE62-13 Part II
    RE7-13
CE63-13 Part II
CE64-13 Part II
CE65-13 Part II
CE66-13 Part II
CE67-13 Part II
CE68-13 Part II
    RE8-13
    RE9-13

RE1– 13
R101.4.3 (IRC N1101.3)

Proponent: Brenda A. Thompson, Clark County Development Services, Las Vegas NV, representing ICC Sustainability, Energy & High Performance Building Code Action Committee (bat@clarkcounty.gov)

Revise as follows:

R101.4.3 (N1101.3) Additions, alterations, renovations or repairs. Additions, alterations, renovations or repairs to an existing building, building system or portion thereof shall conform to the provisions of this code as they relate to new construction without requiring the unaltered portion(s) of the existing building or building system to comply with this code. Additions, alterations, renovations or repairs shall not create an unsafe or hazardous condition or overload existing building systems. An addition shall be deemed to comply with this code if the addition alone complies or if the existing building and addition comply with this code as a single building.

Exception: The following need not comply provided the energy use of the building is not increased:

1. Storm windows installed over existing fenestration.
2. Glass only replacements in an existing sash and frame.
3. Existing ceiling, wall or floor cavities exposed during construction provided that these cavities are filled with insulation.
4. Construction where the existing roof, wall or floor cavity is not exposed.
5. Reroofing for roofs where neither the sheathing nor the insulation is exposed. Roofs without insulation in the cavity and where the sheathing or insulation is exposed during reroofing shall be insulated either above or below the sheathing.

~~6. Replacement of existing doors that separate *conditioned space* from the exterior shall not require the installation of a vestibule or revolving door, provided, however, that an existing vestibule that separates a *conditioned space* from the exterior shall not be removed,~~

~~7.~~ 6. Alterations that replace less than 50 percent of the luminaires in a space, provided that such alterations do not increase the installed interior lighting power.

~~8.~~ 7. Alterations that replace only the bulb and ballast within the existing luminaires in a space provided that the *alteration* does not increase the installed interior lighting power.

Reason: This proposal was submitted by the ICC Sustainability Energy and High Performance Code Action Committee (SEHPCAC). The SEHPCAC was established by the ICC Board of Directors to pursue opportunities to improve and enhance assigned International Codes or portion thereof. This includes both the technical aspects of the codes as well as the code content in terms of scope and application of referenced standards. Since its inception in July, 2011, the SEHPCAC has held 3 open meetings and over 30 workgroup calls which included members of the SEHPCAC as well as any interested party to discuss and debate proposed changes and public comments. Related documentation and reports are posted on the SEHPCAC website at: http://www.iccsafe.org/cs/SEHPCAC/Pages/default.aspx.

It is inappropriate to have item 6 in the existing building provisions of the Residential IECC. Chapter 4(RE) has no provisions requiring a vestibule or revolving door in a residential building. Even if such were provided in an existing residential building, the code shouldn't require keeping a feature not required by the code for new construction of a like building.

Cost Impact: The change will not increase the cost of construction.

RE1-13

Public Hearing:	Committee:	AS	AM	D
	Assembly:	ASF	AMF	DF

R101.4.3-EC-THOMPSON-SEHPCAC.doc

RE2 – 13

R102.1.2 (NEW) (IRC N1101.8), Chapter 5 (IRC Chapter 44)

Proponent: Craig Conner, Building Quality, representing self (craig.conner@mac.com)

Add new text as follows:

R102.1.2 (N1101.8) HERS score compliance. Buildings with a certificate of compliance stating the building complies with the HERS scores in Table R102.1.2 shall be considered in compliance with this code. The certificate of compliance shall be from an approved source.

TABLE 102.1.2 (N1101.8)
REQUIRED HERS SCORES BY CLIMATE ZONE AND HOUSING CHARACTERISTICS

Climate Zone	Building Characteristics	Maximum Score
TBD	TBD	TBD

Add new standard to Chapter 5 as follows:

Residential Energy Services Network, Inc.
P.O. Box 4561
Oceanside, CA 92052-4561

RESNET

RESNET PDS 301-01- 2013 RESNET Mortgage Industry National Home Energy Rating Standards.

Reason: The draft RESNET standard is out for public review now. While it is not ready for reference, the standard may be upgraded to where it can be referenced. If the proprietary nature of the proposed standard was resolved, the score was revised to be based on energy as calculated by the IECC, and other comments were resolved, then the RESNET infrastructure could be an asset in demonstrating code compliance. This is a placeholder for that possibility in this code cycle.

Cost Impact: This code change proposal will not increase the cost of construction.

Analysis: A review of the standard proposed for inclusion in the code, RESNET PDS 301-01- 2013 RESNET Mortgage Industry National Home Energy Rating Standards with regard to the ICC criteria for referenced standards (Section 3.6 of CP#28) will be posted on the ICC website on or before April 1, 2013.

RE2-13

Public Hearing:	Committee:	AS	AM	D
	Assembly:	ASF	AMF	DF

R102.1.2-EC-CONNER.doc

RE3 – 13
R103.2 (IRC N1101.8)

Proponent: Craig Conner, Building Quality, representing self (craig.conner@mac.com)

Revise as follows:

R103.2 (N1101.8) Information on construction documents. Construction documents shall be drawn to scale upon suitable material. Electronic media documents are permitted to be submitted when *approved* by the *code official*. Construction documents shall be of sufficient clarity to indicate the location, nature and extent of the work proposed, and show in sufficient detail pertinent data and features of the building, systems and equipment as herein governed. Details shall include, but are not limited to, as applicable, insulation materials and their *R*-values; fenestration *U*-factors and SHGCs; area-weighted *U*-factor and SHGC calculations; mechanical system design criteria; mechanical and service water heating system and equipment types, sizes and efficiencies; ~~economizer description;~~ equipment and systems controls; ~~fan motor horsepower (hp) and controls;~~ duct sealing, duct and pipe insulation and location; ~~lighting fixture schedule with wattage and control narrative;~~ and air sealing details.

Reason: Commercial requirements don't belong in residential.

Cost Impact: The code change proposal will not increase the cost of construction.

RE3-13

Public Hearing:	Committee:	AS	AM	D
	Assembly:	ASF	AMF	DF

R103.2-EC-CONNER.doc

RE4 – 13

R103.2 (IRC N1101.8), R202 (NEW) (IRC N1101.9), Table R402.1.1 (IRC Table N1102.1.1), Table R402.1.3 (IRC Table N1102.1.3)

Proponent: Meg Waltner, Natural Resources Defense Council, representing self (mwaltner@nrdc.org)

Revise as follows:

R103.2 (N1101.8) Information on construction documents. Construction documents shall be drawn to scale upon suitable material. Electronic media documents are permitted to be submitted when *approved* by the *code official*. Construction documents shall be of sufficient clarity to indicate the location, nature and extent of the work proposed, and show in sufficient detail pertinent data and features of the building, systems and equipment as herein governed. Details shall include, but are not limited to, as applicable, cardinal directions; insulation materials and their *R*-values; fenestration *U*-factors and SHGCs; area-weighted *U*-factor and SHGC calculations; mechanical system design criteria; mechanical and service water heating system and equipment types, sizes and efficiencies; economizer description; equipment and systems controls; fan motor horsepower (hp) and controls; duct sealing, duct and pipe insulation and location; lighting fixture schedule with wattage and control narrative; and air sealing details.

TABLE R402.1.1 (N1102.1.1)
INSULATION AND FENESTRATION REQUIREMENTS BY COMPONENT[a]

CLIMATE ZONE	FENESTRATION *U*-FACTOR[b]	SKYLIGHT[b] *U*-FACTOR	GLAZED FENESTRATION SHGC[b, e,i]	CEILING *R*-VALUE	WOOD FRAME WALL *R*-VALUE	MASS WALL *R*-VALUE[i]	FLOOR *R*-VALUE	BASEMENT[c] WALL *R*-VALUE	SLAB[d] *R*-VALUE & DEPTH	CRAWL SPACE[c] WALL *R*-VALUE
1	NR	0.75	0.20/0.25	30	13	3/4	13	0	0	0
2	~~0.40~~ 0.35	0.65	0.20/0.25	38	13	4/6	13	0	0	0
3	0.35	0.55	0.20/0.25	38	20 or 13+5[h]	8/13	19	5/13[f]	0	5/13
4 except Marine	~~0.35~~0.20	0.55	0.40	49	20 or 13+5[h]	8/13	19	10 /13	10, 2 ft	10/13
5 and Marine 4	~~0.32~~ 0.20	0.55	NR	49	20 or 13+5[h]	13/17	30[g]	15/19	10, 2 ft	15/19
6	~~0.32~~ 0.20	0.55	NR	49	20+5 or 13+10[h]	15/20	30[g]	15/19	10, 4 ft	15/19
7 and 8	~~0.32~~ 0.20	0.55	NR	49	20+5 or 13+10[h]	19/21	38[g]	15/19	10, 4 ft	15/19

For SI: 1 foot = 304.8 mm.

a. *R*-values are minimums. *U*-factors and SHGC are maximums. When insulation is installed in a cavity which is less than the label or design thickness of the insulation, the installed *R*-value of the insulation shall not be less than the *R*-value specified in the table.

b. The fenestration *U*-factor column excludes skylights. The SHGC column applies to all glazed fenestration. Exception: Skylights may be excluded from glazed fenestration SHGC requirements in Climate Zones 1 through 3 where the SHGC for such skylights does not exceed 0.30.

c. "15/19" means R-15 continuous insulation on the interior or exterior of the home or R-19 cavity insulation at the interior of the basement wall. "15/19" shall be permitted to be met with R-13 cavity insulation on the interior of the basement wall plus R-5 continuous insulation on the interior or exterior of the home. "10/13" means R-10 continuous insulation on the interior or exterior of the home or R-13 cavity insulation at the interior of the basement wall.

d. R-5 shall be added to the required slab edge *R*-values for heated slabs. Insulation depth shall be the depth of the footing or 2 feet, whichever is less in Climate Zones 1 through 3 for heated slabs.

e. There are no SHGC requirements in the Marine Zone.

f. Basement wall insulation is not required in warm-humid locations as defined by Figure R301.1 and Table R301.1.

g. Or insulation sufficient to fill the framing cavity, R-19 minimum.

h. First value is cavity insulation, second is continuous insulation or insulated siding, so "13+5" means R-13 cavity insulation plus R-5 continuous insulation or insulated siding. If structural sheathing covers 40 percent or less of the exterior, continuous insulation

R-value shall be permitted to be reduced by no more than R-3 in the locations where structural sheathing is used – to maintain a consistent total sheathing thickness.

i. The second *R*-value applies when more than half the insulation is on the interior of the mass wall.

j. The second SHGC applies when the home's *west-facing glazing area* is less than or equal to 10% of the home's total glazed fenestration area.

TABLE R402.1.3 (N1102.1.3)
EQUIVALENT *U*-FACTORS[a]

CLIMATE ZONE	FENESTRATION *U*-FACTOR	SKYLIGHT *U*-FACTOR	CEILING *U*-FACTOR	FRAME WALL *U*-FACTOR	MASS WALL *U*-FACTOR[b]	FLOOR *U*-FACTOR	BASEMENT WALL *U*-FACTOR	CRAWL SPACE WALL *U*-FACTOR
1	0.50	0.75	0.035	0.082	0.197	0.064	0.360	0.477
2	~~0.40~~ 0.35	0.65	0.030	0.082	0.165	0.064	0.360	0.477
3	0.35	0.55	0.030	0.057	0.098	0.047	0.091[c]	0.136
4 except Marine	~~0.35~~ 0.20	0.55	0.026	0.057	0.098	0.047	0.059	0.065
5 and Marine 4	~~0.32~~ 0.20	0.55	0.026	0.057	0.082	0.033	0.050	0.055
6	~~0.32~~ 0.20	0.55	0.026	0.048	0.060	0.033	0.050	0.055
7 and 8	~~0.32~~ 0.20	0.55	0.026	0.048	0.057	0.028	0.050	0.055

a. Nonfenestration *U*-factors shall be obtained from measurement, calculation or an approved source.

b. When more than half the insulation is on the interior, the mass wall *U*-factors shall be a maximum of 0.17 in Climate Zone 1, 0.14 in Climate Zone 2, 0.12 in Climate Zone 3, 0.087 in Climate Zone 4 except Marine, 0.065 in Climate Zone 5 and Marine 4, and 0.057 in Climate Zones 6 through 8.

c. Basement wall *U*-factor of 0.360 in warm-humid locations as defined by Figure R301.1 and Table R301.1.

Add new definitions as follows:

VERTICAL GLAZING. Glazing other than skylights.

WEST-FACING GLAZING AREA. The area of *vertical glazing* facing between 45 degrees south of west and 30 degrees north of west, inclusive.

Reason: According to the attached analysis prepared by the Department of Energy, the proposed U-factor and SHGC reductions are cost effective. Cost-effective measures should be included in the IECC as a measure of sound energy policy and to protect consumers from unnecessarily high future energy costs.

Window U-factor and SHGC

Description

Heat gain through windows is characterized by the Solar Heat Gain Co-efficient (SHGC) and the heat lost through windows is characterized by the heat transfer coefficient (U-factor). For this concept, U-factors lower than the 2012 IECC code requirements are simulated in the colder climate zones and SHGCs lower than the 2012 IECC code requirements are simulated in the warmer climate zones.

IECC Climate Zone	2012 IECC window requirements U-factor|SHGC	Windows considered in this concept U-factor|SHGC
1	NR|0.25	NR|0.2
2	0.40|0.25	0.35|0.2
3	0.35|0.25	0.35|0.2
4 except marine	0.35|0.40	0.20|0.40
5 & 4-marine	0.32|NR	0.20|NR
6	0.32|NR	0.20|NR
7 & 8	0.32|NR	0.20|NR

Energy Cost Savings

Figure 1 below shows energy cost savings for each climate zone.

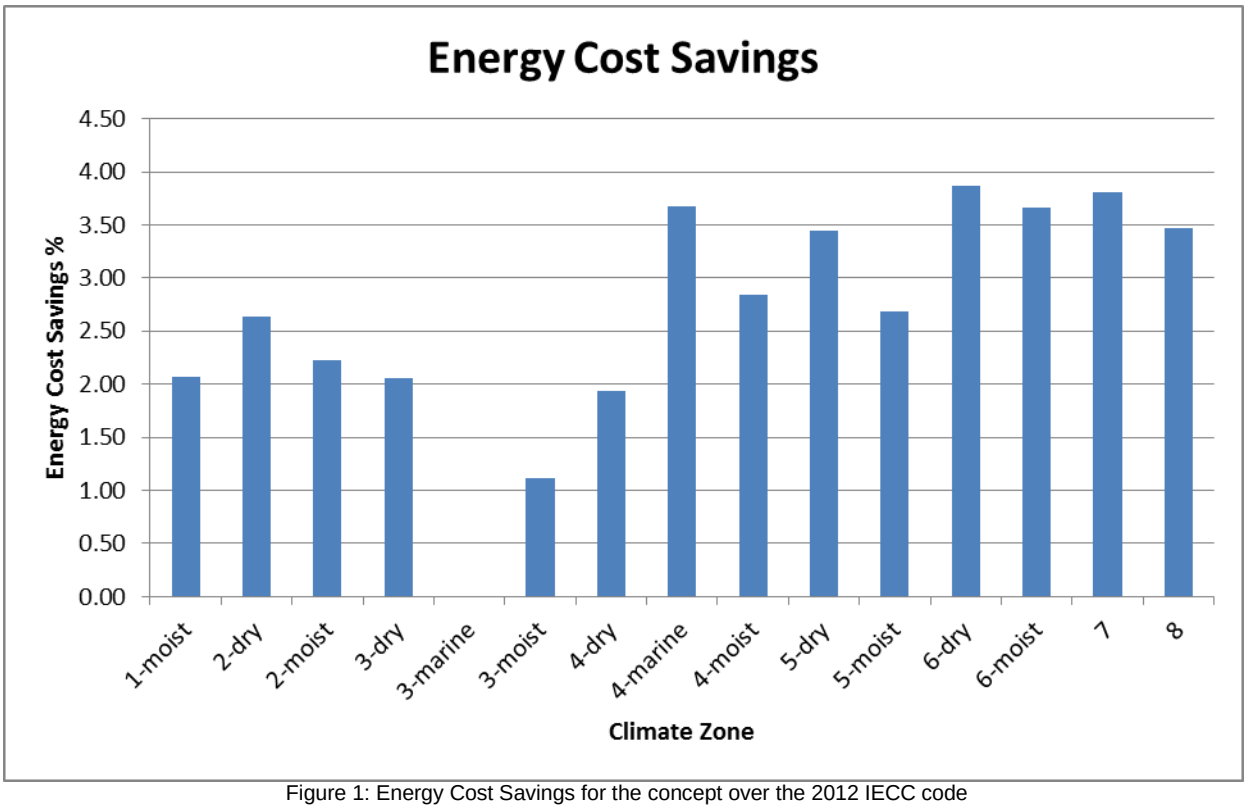

Figure 1: Energy Cost Savings for the concept over the 2012 IECC code

Cost Effectiveness

The cost for windows with lower SHGC is based on the Building Component Community Cost database (BC3)[1]. The cost for windows with SHGC 0.2 is extrapolated from cost for windows with SHGC 0.28 and 0.25. The cost for R-5 (U=0.2 Btu/hr-ft2-F) windows is derived from DOE's High Efficiency Windows Volume Purchase Initiative[2]. This initiative has a target incremental cost of $4/ft2 for R-5 windows over EnergyStar windows. According to manufacturer data collected, two manufacturers had incremental costs of approximately $2/sf and two others had a cost of around $4/sf. It is expected that by the time the 2015 IECC is adopted by states, market transformation will drive down the cost of R-5 windows. We have assumed an incremental cost of $2/sf for these reasons. EnergyStar requires a U of 0.32 in colder climates so the additional cost of going from U 0.35 in climate zone 4 to the EnergyStar level of U 0.32 is taken into account while calculating the incremental cost of R-5 windows. Table 1 below summarizes incremental costs used in this analysis. These costs are material costs alone and it is assumed that the installation cost will remain the same for all windows.

The lifetime of windows is assumed to be equal to the period of analysis - 30 years.

Table 1: Window costs used in this analysis

SHGC	Window Cost ($/ea)[3]	U-factor	Window Cost ($/sf)[4]
0.28	287.20	**0.35**	34.62
0.25	289.21	**0.32**	35.09

[1] http://bc3.pnnl.gov/wiki/index.php/Main_Page
[2] DOE R-5 windows initiative.
[3] For 24"x42" vinyl casement windows from the BC3 database
[4] http://bc3.pnnl.gov/wiki/images/f/fa/Residential_Report.pdf

0.2	292.56*	**0.32 -> 0.2**	2.00

*indicates extrapolated values

These costs are adjusted using location multipliers specified in Table 2 below, to generate incremental costs by state. State specific fuel costs are used in this analysis as specified in Table 3. Figure 2 shows Life Cycle Cost for this measure, by Climate Zone.

Additional Analysis and discussion

Low SHGC windows are usually tinted and there are concerns that they may have limited acceptance among home owners on account of aesthetics. While we are unaware of any surveys or studies supporting this claim, we understand that this may be a valid concern. Additional analyses were conducted to evaluate an alternative of maintaining the SHGC at the 2012 IECC level and limiting the amount of glazing facing west to yield similar energy savings as would result from using windows with lower SHGC.

DOE's analyses indicate that an appropriate limit on **west facing glazing is 10% of the total glazed fenestration area of the home**. There are multiple ways of achieving this limit: the extra glazing on the west facing wall can be moved to adjacent walls; west facing glazing area can be reduced; or the house can be re-oriented favorably. The cost for all the above approaches would be negligible if they are implemented at the design stage. Reducing glazing area may even reduce the first cost associated with the measure. As such, DOE assumed that all these approaches are zero-cost fixes and hence, cost-effective

Table 2: Cost multipliers by State

Location	State	Climate Zone	Moisture Regime	multiplier
Miami	FL	1	moist	0.884
Phoenix	AZ	2	dry	0.928
Houston	TX	2	moist	0.837
El Paso	TX	3	dry	0.837
San Francisco	CA	3	marine	1.142
Memphis	TN	3	moist	0.863
Albuquerque	NM	4	dry	0.903
Salem	OR	4	marine	1.038
Baltimore	MD	4	moist	0.956
Boise	ID	5	dry	0.918
Chicago	IL	5	moist	1.069
Helena	MT	6	dry	0.936
Burlington	VT	6	moist	0.933
Duluth	MN	7	moist	1.06
Fairbanks	AK	8	moist	1.336

Table 3: Fuel Costs by State

Location	State	Climate Zone	Moisture Regime	Electricity-winter ($/kWh)	Electricity-summer ($/kWh)	Gas ($/thm)	Oil ($/MBtu)
Miami	FL	1	moist	0.117	0.117	1.532	23.7
Phoenix	AZ	2	dry	0.099	0.117	1.306	23.7
Houston	TX	2	moist	0.11	0.12	0.814	23.7
El Paso	TX	3	dry	0.11	0.12	0.814	23.7
San Francisco	CA	3	marine	0.149	0.156	0.943	23.7
Memphis	TN	3	moist	0.095	0.095	0.862	23.7
Albuquerque	NM	4	dry	0.099	0.116	0.791	23.7
Salem	OR	4	marine	0.091	0.092	1.174	23.7

Baltimore	MD	4	moist	0.134	0.151	1.039	23.7
Boise	ID	5	dry	0.078	0.084	0.869	23.7
Chicago	IL	5	moist	0.108	0.122	0.717	23.7
Helena	MT	6	dry	0.091	0.096	0.795	23.7
Burlington	VT	6	moist	0.158	0.155	1.433	23.13
Duluth	MN	7	moist	0.103	0.108	0.833	23.7
Fairbanks	AK	8	moist	0.166	0.171	0.839	23.7

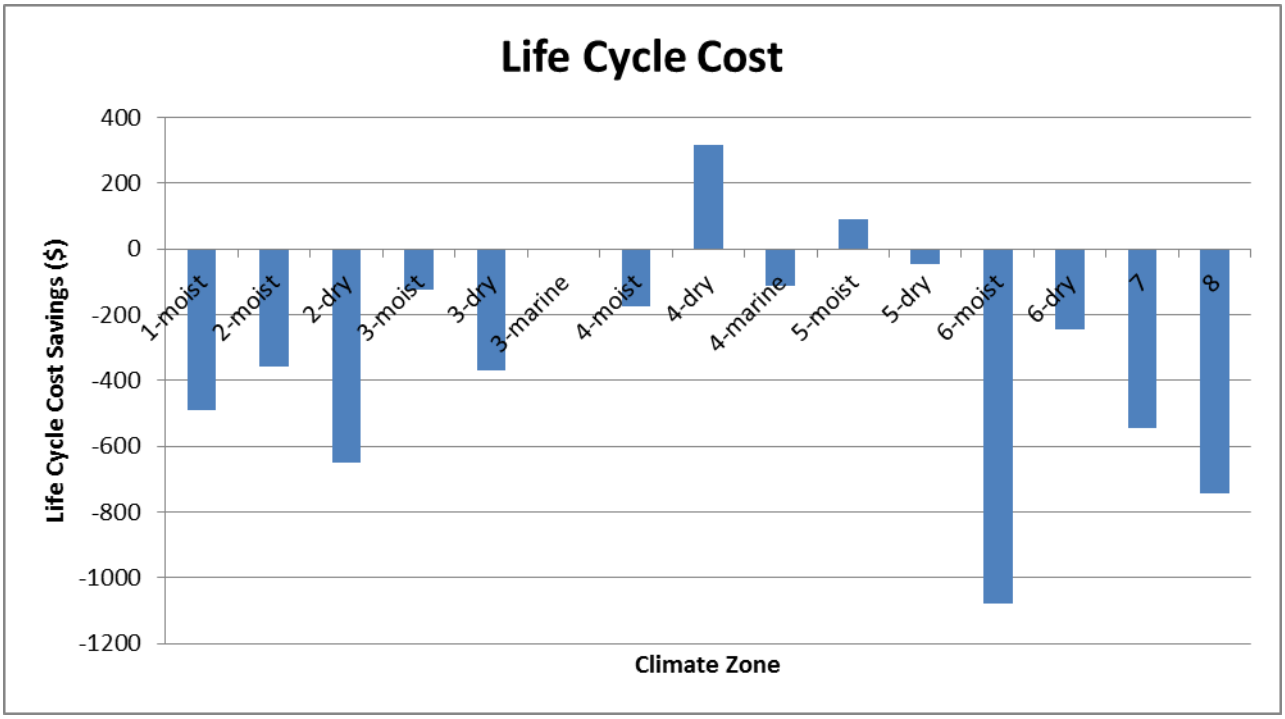

Figure 2: Life Cycle Cost for the concept over the 2012 IECC. *Negative values indicate savings*.

Cost Impact: The code change proposal will increase the cost of construction.

RE4-13

Public Hearing:	Committee:	AS	AM	D
	Assembly:	ASF	AMF	DF

R103.2-EC-WALTNER.doc

RE5 – 13
R202 (IRC N1101.9)

Proponent: Shaunna Mozingo, City of Cherry Hills Village, representing Colorado Chapter of ICC, Inc. (smozingo@coloradocode.net)

Delete without substitution as follows:

IECC SECTION R202 (IRC N1101.9)
GENERAL DEFINITIONS

~~**ENTRANCE DOOR.** Fenestration products used for ingress, egress and access in nonresidential buildings, including, but not limited to, exterior entrances that utilize latching hardware and automatic closers and contain over 50-percent glass specifically designed to withstand heavy use and possibly abuse.~~

Reason: Within the definition itself it clarifies that we are only talking about entrance doors in nonresidential buildings, thus this definition should not be located in the residential chapter.

When the IECC was split up and new chapters 1-3 were created for both the residential and the commercial portions of the code some things were brought over into the commercial chapters that belonged only to residential and vice versa. It becomes necessary now to clean up these very separate and distinct chapters so that those who may be new to the energy code and were not aware of the previous combined versions of chapters 1-3 will not be confused by things that were brought forward by mistake.

Cost Impact: This code change proposal will not increase the cost of construction.

RE5-13

Public Hearing:	Committee:	AS	AM	D
	Assembly:	ASF	AMF	DF

R202-ENTRANCE DOOR-EC-MOZINGO.doc

RE6 – 13
R202 (NEW) (IRC N1101.9 (NEW))

Proponent: Matt Dobson, representing the Vinyl Siding Institute (mdobson@vinylsiding.org)

Add new definition as follows:

IECC SECTION R202 (IRC N1101.9)
GENERAL DEFINITIONS

INSULATED SIDING. An insulated cladding with manufacturer-installed insulating material as an integral part of the cladding product having a minimum R-value of R-2, based on testing in accordance with ASTM C1363.

Reason: This definition will help building officials and energy specialists/raters understand how to qualify insulated siding as home insulation. It includes language similar to the definition of insulated vinyl siding in ASTM D7793 and uses insulated sheathing's R-value threshold in the current energy code.

This is a general definition that can be applied to any insulated siding, regardless of the material. It will provide direction to manufacturers of these products that want to properly test their products and qualify them as home insulation.

By setting a minimum R-value threshold for qualification and stating the test method that must be used for insulation, it provides a clear path for evaluation and code acceptance when a cladding system is classified as insulation.

This testing is done using ASTMC1363 (hot box) as specified by the rules for home insulation in Federal Trade Commission regulation 16 CFR Part 460 and as referenced in the energy code under section R303.1.4. The test protocol has been reviewed and deemed to be in the spirit of the rule, 16 CRF Part 460, by the Federal Trade Commission. The test methodology for insulated siding has been accepted and published as a part of the ENERGY STAR Version 3 program for new construction.

There have been questions about how the R-value of insulated siding will be impacted by air movement or wind. As specified in ASTM D7793, insulated vinyl siding is tested under ASTM C1363 without any special sealing of joints or laps, just as it would be installed in the field. ASTM C1363 includes a wind of specified velocity as part of test. Although the primary purpose of this wind is to remove the effect of the boundary air film, it also provides an opportunity for air to circulate into or behind the siding. The R-value reported for the test thus includes the effect of this wind and any reduction in insulating performance due to entry of air.

As part of the development of test methodology for insulated vinyl siding, a variety of profile types were tested both unsealed (as installed) and with all joints and laps sealed. A comparison of the results shows that there is indeed a reduction in R-value of up to about 25% for the unsealed configuration, but that the remaining R-value is still substantial. Below is a sample of the results of this study which show products end R-value in sealed and unsealed configurations. Per ASTM D7793, the R-value reported for insulated vinyl siding must be determined through testing in an unsealed, as-installed configuration.

Product	Lock Style	Wind Config	Sealing	R-value
Single 7	Standard Lock	Perpendicular	Sealed	2.52
		Perpendicular	Unsealed	2.12
		Perpendicular	Unsealed	2.13
		Perpendicular	Unsealed	2.13
		Perpendicular	Unsealed	2.16
Quad 4.5	Standard Lock	Perpendicular	Sealed	3.27
		Perpendicular	Unsealed	2.56
		Perpendicular	Unsealed	2.57
		Perpendicular	Unsealed	2.57
		Perpendicular	Unsealed	2.63
		Perpendicular	Unsealed	2.53
		Parallel Bottom	Sealed	2.85
		Parallel Bottom	Unsealed	2.65
		Parallel-Top	Sealed	2.85
		Parallel-Top	Unsealed	2.55

Double 6	Standard Lock	Perpendicular	Sealed	2.86
		Perpendicular	Unsealed	2.34
		Perpendicular	Unsealed	2.33
		Perpendicular	100% Unsealed	2.34
		Parallel Bottom	Sealed	2.75
		Parallel Bottom	Unsealed	2.45
		Parallel-Top	Sealed	2.75
		Parallel-Top	Unsealed	2.55
A: Double 6	Stack Lock	Perpendicular	Sealed	3.74
		Perpendicular	Unsealed	2.03
		Perpendicular	Sealed	3.54
		Perpendicular	Unsealed	2.69
		Parallel Bottom	Sealed	3.35
		Parallel Bottom	Unsealed	2.65
		Parallel-Top	Sealed	3.35
		Parallel-Top	Unsealed	2.75
B: Double 6	Stack Lock	Perpendicular	Sealed	3.11
		Perpendicular	Unsealed	1.97
Double 4.5	Standard Lock	Perpendicular	Sealed	3.13
		Perpendicular	Unsealed	2.32

A complete copy of this report and be viewed here by going to
http://www.vinylsiding.org/ABOUTSIDING/insulated/Summary_of_VSI_R-value_Testing.pdf.

For more information about insulated siding, go to www.insulatedsiding.info.

Cost Impact: This change have minimal cost impact as many products on the market are certified and tested using this methodology.

EC6-13

Public Hearing:	Committee:	AS	AM	D
	Assembly:	ASF	AMF	DF

R202-INSULATED SIDING (NEW)-EC-DOBSON

RE7 – 13
R302.1 (IRC N1101.11)

Proponent: Jerry Anderson, City of Overland Park, KS, representing self (anderson@opkansas.org)

Revise as follows:

R302.1 (N1101.11) Interior design conditions. The interior design temperatures used for heating and cooling load calculations shall be in accordance with ACCA Manual J. ~~a maximum of 72°F (22°C) for heating and minimum of 75°F (24°C) for cooling.~~

Reason: The purpose of this code change is to allow some flexibility in design conditions. There is no valid reason for the code to specify exact temperatures for interior design. Interior design conditions are all about comfort. The 72 degree temperature for heating and the 75 degree temperature for cooling are simply design temps where most people are comfortable, but comfort is dependent on physical attributes of individuals (age, sex, weight, metabolism, etc). If someone wishes to design a home or residential facility with different design conditions they should be allowed to do so. For example a group home being constructed for the elderly in accordance with the IRC provisions may wish to have different interior design temperatures for heating. The standard would allow for different design temperatures because it views the 72 degree and 75 degree marks as target values.

Cost Impact: The code change proposal will not increase the cost of construction.

RE7-13

Public Hearing:	Committee:	AS	AM	D
	Assembly:	ASF	AMF	DF

R302.1-EC-ANDERSON.doc

RE8 – 13
R202 (NEW) (IRC N1101.9 (NEW)), R304 (NEW) (IRC N1102.16 (NEW))

Proponent: Chris Mathis, Mathis Consulting Company, representing self

Add new text as follows:

R304 (N1102.16) SOLAR READY ZONE.

R304.1 (N1102.16.1) General. All new detached one- and two-family dwellings, and multiple single family dwellings having roofs oriented between 110 degrees and 270 degrees of true north shall comply with sections R304.2 through R304.8.

R304.2 (N1102.16.2) Mandatory construction document requirements for solar ready zone. Construction documents for new detached one- and two-family dwellings, and multiple single family dwellings having roofs oriented between 110 degrees and 270 degrees of true north shall indicate the *solar ready zone*.

R304.3 (N1102.16.3) Solar ready zone area. The total *solar ready zone* area shall be no less than 300 square feet exclusive of mandatory access or set back areas required by the *International Fire Code*. New detached one- and two-family dwellings, and multiple single family dwellings with three stories or more and with a total floor area less than or equal to 2000 square feet shall have a *solar ready zone* area no less than 150 square feet. The *solar ready zone* shall be comprised of areas that have no dimension less than five feet and are no less than 80 square feet exclusive of mandatory access or set back areas as required by the *International Fire Code*.

Exceptions:

1. New buildings with a permanently installed on-site renewable energy system.
2. Roof areas in shade more than 70 percent of the time.

R304.4 (N1102.16.4) Obstructions. *Solar ready zones* shall be free from obstructions, including but not limited to vents, chimneys, and roof mounted equipment.

R304.5 (N1102.16.5) Roof load documentation. The structural design loads for roof dead load and roof live load shall be clearly indicated on the construction documents.

R304.6 (N1102.16.6) Interconnection pathway. Construction documents shall indicate the installed pathways for conduit, pre-wiring, pre-plumbing, or plumbing chase from the *solar ready zone* to the electrical service panel or service hot water system.

R304.7 (N1102.16.7) Electrical service reserved space. The main electrical service panel shall have a minimum busbar rating of 200 amps, shall have reserved space to allow installation of a dual pole circuit breaker for future solar electric installation, and shall be labeled “For Future Solar Electric”. The reserved space shall be positioned at the opposite (load) end from the input feeder location or main circuit location.

Exception: Building projects with installed pre-plumbing or plumbing chase from the *solar ready zone* to reserved space at the water heating system.

R304.8 (N1102.16.8) Construction documentation. A copy of the construction documents indicating the *solar ready zone* and other requirements of this section shall be posted near the electrical panel, water heater, or other conspicuous location in the building.

Add new definition as follows:

IECC SECTION R202 (IRC N1101.9)
GENERAL DEFINITIONS

SOLAR READY ZONE. A section or sections of the roof or building overhang designated and reserved for the future installation of a solar electric or solar thermal system.

Reason: This proposal is intended to support future potential improvements for detached one- and two-family dwellings, and multiple single family dwellings for solar electric and solar thermal systems. The proposed language follows similar language from code adoptions by local municipalities in Tucson, AZ, Boulder, CO, and from the 2013 California Title 24 building code.

This proposal is intended to identify the areas of a residential building roof, called the solar ready zone, for potential future installation of renewable energy systems. This proposal requires documenting necessary solar ready information on the plans, some of which may already be required in permit construction requirements. This proposal also requires the builder to post specific information about the home for use by the homeowner(s).

This proposal requires the installation of chase, conduit, pre wiring, or pre-plumbing. It does not require any specific physical orientation of the residential building. It does not require any increased load capacities for residential roofing systems. When considered at the time of design, this proposal needs not increase the cost of construction, though will add a small, recoverable cost in many cases.

The documentation of solar ready zones and roof load calculations (already performed during the design phase) will assist building departments, as well as any future solar contractors seeking to install renewable energy systems on the roof. The builder/designer is knowledgeable on the intricacies of each model and plan, and easily can identify unobstructed roof areas, as well as spaces where conduit, wiring, and plumbing can be routed from the roof to the respective utility areas. This will save building departments and solar designers time and effort when installing future solar systems.

Upfront costs of renewable energy systems frequently are the largest deterrent to installation. Without preparation at the time of construction, solar installation may not even be technically possible. If a homeowner wishes to install a solar energy system later, this preparation can save thousands of dollars in labor, installation, design, and integration of the solar system into the house. Solar ready design can decrease the payback period tremendously. This is critical as these systems continue to become more cost effective and incentives are more readily available. In the instance that the initial homeowner does not intend to install a solar system, making the building solar ready increases the resale value of the home and the cost can be recovered.

Many building departments have been mandated by local regulations to accelerate permits and inspections for solar installation. Having important information and documentation available to the building department, solar contractor, and homeowner will assist in supporting the accelerated working environment many municipalities have mandated.

The U.S. Department of Energy's (DOE) SunShot Initiative has set a goal to make solar energy cost competitive with other forms of energy by the end of the decade which will reduce installed costs of solar energy systems by about 75%. This initiative, combined with increased pressures on our energy supply and demand, will encourage and drive greater adoption of renewable energy systems on residential buildings.

Cost Impact: The code change proposal will increase the cost of construction.

RE8-13

Public Hearing:	Committee:	AS	AM	D
	Assembly:	ASF	AMF	DF

R304 (NEW)-EC-MATHIS.doc

RE9 – 13
R202 (NEW) (IRC N1101.9 (NEW)), R304 (NEW) (IRC N1101.16 (NEW))

Proponent: Jim Meyers, Southwest Energy Efficiency Project, representing Southwest Energy Efficiency Project

Add new text as follows:

SECTION R304
SOLAR READY ZONE

R304.1 General. (N1102.16.1) New detached one- and two-family dwellings, and multiple single family dwellings having roofs oriented between 110 degrees and 270 degrees of true north shall comply with Sections R304.2 through R304.8.

R304.2 (N1102.16.2) Construction document requirements for solar ready zone. Construction documents for new detached one- and two-family dwellings, and multiple single family dwellings having roofs oriented between 110 degrees and 270 degrees of true north shall indicate a *solar ready zone*.

R304.3 (N1102.16.3) Solar ready zone area. The total *solar ready zone* area shall be no less than 300 square feet exclusive of access or set back areas as required by the *International Fire Code*. New multiple single family dwellings three stories or more in height above grade plane and with a total floor area less than or equal to 2000 square feet shall have a *solar ready zone* area of not less than 150 square feet. The *solar ready zone* shall be comprised of areas not less than five feet in width and not less than 80 square feet exclusive of access or set back areas as required by the *International Fire Code*.

Exceptions:

1. New buildings with a permanently installed on-site renewable energy system.
2. Roof areas that are in shade more than 70 percent of the time.

R304.4 (N1102.16.4) Obstructions. *Solar ready zones* shall be free from obstructions, including but not limited to vents, chimneys, and roof mounted equipment.

R304.5 (N1102.16.5) Roof load documentation. The structural design loads for roof dead load and roof live load shall be clearly indicated on the construction documents.

R304.6 (N1102.16.6) Interconnection pathway. Construction documents shall indicate pathways for routing of conduit or plumbing from the *solar ready zone* to the electrical service panel or service hot water system.

R304.7 (N1102.16.7) Electrical service reserved space. The main electrical service panel shall have a reserved space to allow installation of a dual pole circuit breaker for future solar electric installation and shall be labeled “For Future Solar Electric”. The reserved space shall be positioned at the opposite (load) end from the input feeder location or main circuit location.

R304.8 (N1102.16.8) Construction documentation certificate. A permanent certificate, indicating the *solar ready zone* and other requirements of this section, shall be posted near the electrical distribution panel, water heater or other conspicuous location by the builder or registered design professional.

Add new definition as follows:

IECC SECTION R202 (IRC N1101.9)
GENERAL DEFINITIONS

SOLAR READY ZONE. A section or sections of the roof or building overhang designated and reserved for the future installation of a solar electric or solar thermal system.

Reason: This proposal is intended to support future potential improvements for detached one- and two-family dwellings, and multiple single family dwellings for solar electric and solar thermal systems. The proposed language follows similar language from code adoptions by local municipalities in Tucson, AZ, Boulder, CO, and from the 2013 California Title 24 building code.

This proposal is intended to identify the areas of a residential building roof, called the solar ready zone, for potential future installation of renewable energy systems. This proposal requires documenting necessary solar ready zone information on the plans, some of which may already be required in permit construction requirements. This proposal also requires the builder to post specific information about the home for use by the homeowner(s).

This proposal does not require the installation of conduit, pre wiring, or pre-plumbing. It does not require any specific physical orientation of the residential building. It does not require any increased load capacities for residential roofing systems. It does not require the redesign of plans.

The documentation of solar ready zones and roof load calculations (already performed during the design phase) will assist building departments as well as any future solar contractors seeking to install renewable energy systems on the roof. The builder/designer is knowledgeable on the intricacies of each model and plan and can easily identify unobstructed roof areas as well as spaces where conduit, wiring and plumbing can be routed from the roof to the respective utility areas. This will save building departments and solar designers' time and effort when installing future solar systems. If a homeowner wishes to install a solar energy system later, this documentation can save thousands of dollars in labor, installation, design and integration of the solar system into the house.

Many building departments have been mandated by local regulations to accelerate permits and inspections for solar installation. Having important information and documentation available to the building department, solar contractor and homeowner will assist in supporting the accelerated working environment many municipalities have mandated.

The U.S. Department of Energy's (DOE) SunShot Initiative has set a goal to make solar energy cost competitive with other forms of energy by the end of the decade which will reduce installed costs of solar energy systems by about 75%. This initiative, combined with increased pressures on our energy supply and demand, will encourage and drive greater adoption of renewable energy systems on residential buildings.

Cost Impact: The code change proposal will increase the cost of construction.

RE9-13

Public Hearing:	Committee:	AS	AM	D
	Assembly:	ASF	AMF	DF

R304 (NEW)-EC-MEYERS

RE10 – 13

R401.2 (IRC N1101.15), R402.4.1.2 (IRC N1102.4.1.2), R402.5 1 (IRC N1102.5.1), R403.2.2 (IRC N1103.2.2), R406 (NEW) (IRC N1106 (NEW)

Proponent: W. Ronald Burton, PTW Advisors, LLC., representing Leading Builders of America

Revise as follows:

R401.2 (N1101.2) Compliance. Projects shall comply with one of the following:

1. Sections identified as "mandatory" and with either sections identified as "prescriptive" or the performance approach in Section R405.
2. Optional Performance Compliance in Section R406.

R402.4.1.2 (N1102.4.1.2) Testing. The building or dwelling unit shall be tested and verified as having an air leakage rate of not exceeding 5 air changes per hour in Climate Zones 1 and 2, and 3 air changes per hour in Climate Zones 3 through 8. Testing shall be conducted with a blower door at a pressure of 0.2 inches w.g. (50 Pascals). Where required by the code official, testing shall be conducted by an approved third party. A written report of the results of the test shall be signed by the party conducting the test and provided to the code official. Testing shall be performed at any time after creation of all penetrations of the building thermal envelope.

> **Exception:** The air leakage rate in buildings complying with the Optional Performance Compliance in Section R406 shall not exceed 7 ACH50.

R402.5 (N1102.5) Maximum fenestration U -factor and SHGC (Mandatory). The area-weighted average maximum fenestration U-factor permitted using tradeoffs from Sections R402.1.4, ~~or~~ R405 or R406 shall be 0.48 in Climate Zones 4 and 5 and 0.40 in Climate Zones 6 through 8 for vertical fenestration, and 0.75 in Climate Zones 4 through 8 for skylights. The area-weighted average maximum fenestration SHGC permitted using tradeoffs from Section R405 or Section R406 in Climate Zones 1 through 3 shall be 0.50

R403.2.2 (N1103.2.2) Sealing (Mandatory). Ducts, air handlers, and filter boxes shall be sealed. Joints and seams shall comply with either the International Mechanical Code or International Residential Code, as applicable.

Exceptions:

1. Air-impermeable spray foam products shall be permitted to be applied without additional joint seals.
2. Where a duct connection is made that is partially inaccessible, three screws or rivets shall be equally spaced on the exposed portion of the joint so as to prevent a hinge effect.
3. Continuously welded and locking-type longitudinal joints and seams in ducts operating at static pressures less than 2 inches of water column (500 Pa) pressure classification shall not require additional closure systems.

Duct tightness shall be verified by either of the following:

1. Postconstruction test: Total leakage shall be less than or equal to 4 cfm (113.3 L/min) per 100 ft^2 (9.29 m^2) of conditioned floor area when tested at a pressure differential of 0.1 inches w.g. (25 Pa) across the entire system, including the manufacturer's air handler enclosure. All register boots shall be taped or otherwise sealed during the test.

2. Rough-in test: Total leakage shall be less than or equal to 4 cfm (113.3 L/min) per 100 ft^2 (9.29 m^2) of conditioned floor area when tested at a pressure differential of 0.1 inches w.g. (25 Pa) across the system, including the manufacturer's air handler enclosure. All registers shall be taped or otherwise sealed during the test. If the air handler is not installed at the time of the test, total leakage shall be less than or equal to 3 cfm (85 L/min) per 100 ft^2 (9.29 m^2) of conditioned floor area.

Exceptions:

1. Duct tightness test is not required if the air handler and all ducts are located within conditioned space.
2. Buildings complying with the Optional Performance Compliance in Section R406 shall have an air leakage rate not exceeding 8 cfm (226.6 L/min) for ducts located outside of conditioned space.

SECTION R406 (N1106)
OPTIONAL PERFORMANCE COMPLIANCE

R406.1 (N1106.1)Scope. This section establishes criteria for compliance using an optional energy performance analysis. Such analysis shall include only heating, cooling, and service water heating energy ~~only~~.

R406.2 (N1106.2) Mandatory requirements. Compliance with Section R406 requires compliance with the mandatory provisions identified in Chapter 4 of this code. Supply and return ducts not completely inside the *building thermal envelope* shall be ~~insulated to a minimum of~~ provided with insulation having an R value of not less than R-6.

R406.3 (N1106.3) Performance-based compliance. For *residential buildings* complying with Section R406, compliance based on simulated energy performance requires that a proposed *residential building* (*proposed design)* be shown to have an annual energy cost that is less than or equal to 95% of the annual energy cost of a residence complying with sections of the residential provisions in Chapter 4 of this code identified as "mandatory" and configured as specified by the *standard reference design* in Table R406.4.2 (1) using the U-factor and SHGC-factors ~~the values~~ in *Table R406.4.2 (5)*. The proposed design values shall not be greater than the U-factors specified in Table R406.4.2 (4) or the SHGC value specified in Table R406.4.2 (3). Energy prices shall be taken from ~~a source~~ an approved source ~~by the code official~~, such as the Department of Energy, Energy Information Administration's State Energy Price and Expenditure Report. Time-of-use pricing in energy cost calculations shall be required where required by the Code Official.

Exception: The energy use based on source energy expressed in Btu or Btu per square foot of *conditioned floor area* shall be alternatives to the energy cost. The source energy multiplier for electricity shall be 3.16. The source energy multiplier for fuels other than electricity shall be 1.1.

R406.4 (N1106.4) Documentation. Documentation of the software used for the performance design and the parameters for the building shall be in accordance with Sections R406.4.1 through R406.4.3.

R406.4.1 (N1106.4.1) Compliance software tools. Documentation verifying that the methods and accuracy of the compliance software tools conform to the provisions of this section shall be provided to the *code official*.

R406.4.2 (N1106.4.2) Compliance report. Compliance software tools shall generate a report that documents that the *proposed design* complies with Section R406.3. The compliance documentation shall include the following information:

1. Address or other identification of the residence;
2. An inspection checklist documenting the building component characteristics of the *proposed design* as listed in Table R406.4.2 (1). The inspection checklist shall show

results for both the *standard reference design* and the *proposed design*, and shall document all inputs entered by the user necessary to reproduce the results;

3. Name of individual completing the compliance report; and
4. Name and version of the compliance software tool.

406.4.2.1(N1106.4.2.1) Multiple orientations. Where an otherwise identical building model is offered in multiple orientations, documentation that the building meets the performance requirements in each of the four cardinal (north, east, south and west) orientations shall be acceptable for demonstration of compliance for any orientation.

R406.4.3 (N1106.4.3) Additional documentation. The *code official* shall be permitted to require the following documents:

1. Documentation of the building component characteristics of the *standard reference design.*
2. A certification signed by the builder providing the building component characteristics of the proposed design as given in Table R406.4.2 (1).
3. Documentation of the actual values used in the software calculations for the *proposed design*.

R406.5 (N1106.5) Calculation procedure. Calculations of the performance design shall be in accordance with Sections R406.5.1 and R406.5.2.

R406.5.1 (N1106.5.1) General. The standard reference design and *proposed design* shall be configured and analyzed using identical methods and techniques.

R406.5.2 (N1106.5.2) *Residential building* specifications. The *standard reference design* and *proposed design* shall be configured as specified by Table R406.4.2 (1).

R406.5.3 (N1106.5.3) Energy cost analysis. The annual energy cost of the *proposed design* shall be analyzed and compared to a design complying with sections of the residential provisions in Chapter 4 of this code identified as “mandatory” and configured as specified by the *standard reference design* in Table R406.4.2 (1) using the U-factor and SHGC-factors in *Table R406.4.2 (5)*.

R406.6 (N1106.6) Calculation software tools. Calculation software, where used, shall be in accordance with Sections R406.6.1 through R406.6.3.

R406.6.1 (N1106.6.1) Minimum capabilities. Calculation procedures used to comply with this section shall be software tools capable of calculating the annual energy consumption of all building elements that differ between a design complying with sections of the residential provisions in Chapter 4 of this code identified as “mandatory” and configured as specified by the *standard reference design* in Table R406.4.2 (1) using the U-factor and SHGC-factors in *Table R406.4.2 (5)* and the *proposed design* and shall include the following capabilities:

1. The calculation procedure shall not allow the user to directly modify the building component characteristics of the design complying with sections of the residential provisions in Chapter 4 of this code identified as “mandatory” and configured as specified in Table R406.4.2 (1) using the U-factor and SHGC-factors in *Table R406.4.2 (5)*.
2. Calculation of whole-building ,~~(~~as a single zone,~~)~~ sizing for the heating and cooling equipment in the *standard reference design* residence in accordance with Section R403.6.
3. Calculations that account for the effects of indoor and outdoor temperatures and part-load ratios on the performance of heating, ventilating and air-conditioning equipment based on climate and equipment sizing.

4. Printed *code official* inspection checklist listing each of the *proposed design* component characteristics from Table R406.4.2 (1) determined by the analysis to provide compliance, along with their respective performance ratings (such as R-value, U-factor, SHGC, HSPF, AFUE, SEER, EF, etc.).

R406.6.2 (N1106.6.2) Specific approval. Performance analysis tools meeting the applicable sections of Section R406 shall be approved. Approval of tools shall be based on meeting a specified threshold for a jurisdiction. The *code official* shall be permitted to approve tools for a specified application or limited scope.

R406.6.3 (N1106.6.3) Input values. When calculations require input values not specified by Sections R403, R404 and R406, those input values shall be taken from an approved source.

TABLE R406.4.2 (1) (N1106.4.2(1))
SPECIFICATIONS FOR THE STANDARD REFERENCE AND PROPOSED DESIGNS

BUILDING COMPONENT	STANDARD REFERENCE DESIGN	PROPOSED DESIGN
Above-grade walls	Type: mass wall if proposed wall is mass; otherwise wood frame. Gross area: same as proposed U-factor: from Table R406.4.2 (4) Solar absorptance = 0.75 Emittance = 0.90	As proposed As proposed As proposed[a] As proposed As proposed
Basement and crawl space walls	Type: same as proposed Gross area: same as proposed U-factor: from Table R406.4.2 (4), with insulation layer on interior side of walls.	As proposed As proposed As proposed[a]
Above-grade floors	Type: wood frame Gross area: same as proposed U-factor: from Table R406.4.2 (4)	As proposed As proposed As proposed[a]
Ceilings	Type: wood frame Gross area: same as proposed U-factor: from Table R406.4.2 (4)	As proposed As proposed As proposed[a]
Roofs	Type: composition shingle on wood sheathing Gross area: same as proposed Solar absorptance = 0.75 Emittance = 0.90	As proposed As proposed As proposed As proposed
Attics	Type: vented with aperture = 1 ft^2 per 300 ft^2 ceiling area	As proposed
Foundations	Type: same as proposed foundation wall area above and below grade and soil characteristics.	As proposed
Doors	Area: 40 ft^2 Orientation: North U-factor: same as fenestration from Table R406.4.2 (4).	As proposed As proposed As proposed[a]
Glazing[b]	Total area[c] =15% of the conditioned floor area. Orientation: equally distributed to four cardinal compass orientations (N, E, S & W). U-factor: from Table R406.4.2 (4) SHGC: From Table R406.4.2 (3) except that for climates with no requirement (NR) SHGC = 0.40 shall be used. Interior shade fraction: Summer (all hours when cooling is required) = 0.70 Winter (all hours when heating is required) = 0.85[e] External shading: none	As proposed As proposed As proposed[d] As proposed Same as *standard reference design* As proposed
Skylights	None	As proposed
Thermally isolated sunrooms	None	As proposed
Air exchange rate	Air leakage rate of 7 air changes per hour at a pressure of 0.2 inches w.g (50 Pa). The mechanical ventilation rate shall be in addition to the air leakage rate and the same as in the proposed design, but no greater than 0.01 x CFA + 7.5 x (N_{br} + 1) where: CFA = conditioned floor area N_{br} = number of bedrooms Energy recovery shall not be assumed for mechanical ventilation.	For residences that are not tested, the same air leakage rate as the *standard reference design*. For tested residences, the measured air exchange rate[f]. The mechanical ventilation rate[g] shall be in addition

		to the air leakage rate and shall be as proposed.
Mechanical ventilation	None, except where mechanical ventilation is specified by the proposed design, in which case: Annual vent fan energy use: kWh/yr = 0.03942 x CFA + 29.565 x (N_{br} +1) where: CFA = conditioned floor area N_{br} = number of bedrooms	As proposed
Internal gains	IGain = 17,900 + 23.8 x CFA + 4104 x N_{br} (Btu/day per dwelling unit)	Same as *standard reference design*.
Internal mass	An internal mass for furniture and contents of 8 pounds per square foot of floor area.	Same as *standard reference design*, plus any additional mass specifically designed as a thermal storage element[h] but not integral to the building envelope or structure.
Structural mass	For concrete or masonry floor slabs, 80% of floor area covered by R-2 carpet and pad, and 20% of floor directly exposed to room air. For concrete or masonry basement walls, as proposed, but with insulation required by Table R406.4.2 (3) located on the interior side of the walls. For other walls, for ceilings, floors, and interior walls, wood frame construction.	As proposed As proposed As proposed
Heating systems[i, j]	Fuel type: same as proposed design Efficiencies: Electric: air-source heat pump with prevailing federal minimum standards. Nonelectric furnaces: natural gas furnace with prevailing federal minimum standards. Nonelectric boilers: natural gas boiler with prevailing federal minimum standards. Capacity: sized in accordance with Section R403.6	As proposed As proposed[m]
Cooling systems[i, k]	Fuel type: Electric Efficiency: in accordance with prevailing federal minimum standards. Capacity: sized in accordance with Section R403.6.	As proposed
Service water heating[i, l]	Fuel type: same as proposed design Efficiency: in accordance with prevailing federal minimum standards. Use: Use: gal/day = 30 + (10 N_{br}) Tank temperature: 120°F	As proposed Same as *standard reference design.*
Thermal distribution systems	Duct outside the *building thermal envelope* shall be insulated to R-6 as required by Section R406.2. Untested distribution systems: DSE = 0.88 Tested ducts: Leakage rate to outside conditioned space as specified in Section R403.2.2. Duct location: Unconditioned attic Duct insulation: Per Section R403.2.1	Thermal distribution system efficiency shall be as tested to outside conditioned space or as specified in Table R406.4.2 (2) if not tested. As proposed As proposed
Thermostat	Type: Manual, cooling temperature setpoint = 75°F; Heating temperature setpoint = 72°F	As proposed

For SI: 1 square foot = 0.93 m^2, 1 British thermal unit = 1055 J, 1 pound per square foot = 4.88 kg/m^2, 1 gallon (U.S.) = 3.785 L, °C = (°F-3)/1.8, 1 degree = 0.79 rad.

a. If the total building thermal envelope UA (sum of U- factor times assembly area) is less than or equal to the total UA from using the U-factors in Table R406.4.2 (4) (multiplied by the same assembly area as in the proposed building), the building shall be considered to be in compliance with Table R406.4.2 (3). The UA calculation shall be performed using a method consistent with the ASHRAE Handbook of Fundamentals and shall include the thermal bridging effects of framing materials. The SHGC requirements shall be met in addition to UA compliance.

b. Glazing shall be defined as sunlight-transmitting fenestration, including the area of sash, curbing or other framing elements, that enclose conditioned space. Glazing includes the area of sunlight-transmitting fenestration assemblies in walls bounding conditioned basements. For doors where the sunlight-transmitting opening is less than 50 percent of the door area, the glazing area is the

sunlight transmitting opening area. For all other doors, the glazing area is the rough frame opening area for the door including the door and the frame.
c. For residences with conditioned basements, R-2 and R-4 residences and townhouses, the following formula shall be used to determine glazing area:
AF = As x FA x F
where:
AF = Total glazing area.
As = Standard reference design total glazing area.
FA = (Above-grade thermal boundary gross wall area)/(above-grade boundary wall area + 0.5 x below-grade boundary wall area).
F = (Above-grade thermal boundary wall area)/(above-grade thermal boundary wall area + common wall area) or 0.56, whichever is greater.
and where:
Thermal boundary wall is any wall that separates conditioned space from unconditioned space or ambient conditions.
Above-grade thermal boundary wall is any thermal boundary wall component not in contact with soil.
Below-grade boundary wall is any thermal boundary wall in contact with soil.
Common wall area is the area of walls shared with an adjoining dwelling unit.
L and CFA are in the same units.
d. The use of an area-weighted average of fenestration products satisfies the U–factor requirements. The use of an area-weighted average of fenestration products more than 50-percent glazed satisfies the SHGC requirements.
e. For fenestrations facing within 15 degrees (0.26 rad) of true south that are directly coupled to thermal storage mass, the winter interior shade fraction shall be permitted to be increased to 0.95 in the proposed design.
f. Where required by the code official, testing shall be conducted by an approved party. Hourly calculations as specified in the ASHRAE Handbook of Fundamentals, or the equivalent shall be used to determine the energy loads resulting from infiltration.
g. The combined air exchange rate for infiltration and mechanical ventilation shall be determined in accordance with Equation 43 of 2001 ASHRAE Handbook of Fundamentals, and the "Whole-house Ventilation" provisions of 2001 ASHRAE Handbook of Fundamentals, for intermittent mechanical ventilation.
h. Thermal storage element shall mean a component not part of the floors, walls or ceilings that is part of a passive solar system, and that provides thermal storage such as enclosed water columns, rock beds, or phase-change containers. A thermal storage element ~~must~~ shall be in the same room as fenestration that faces within 15 degrees (0.26 rad) of true south, or ~~must~~ shall be connected to such a room with pipes or ducts that allow the element to be actively charged.
i. For a proposed design with multiple heating, cooling or water heating systems using different fuel types, the applicable standard reference design system capacities and fuel types shall be weighted in accordance with their respective loads as calculated by accepted engineering practice for each equipment and fuel type present.
j. For a proposed design without a proposed heating system, a heating system with the prevailing federal minimum efficiency shall be assumed for both the standard reference design and proposed design.
k. For a proposed design home without a proposed cooling system, an electric air conditioner with the prevailing federal minimum efficiency shall be assumed for both the standard reference design and the proposed design.
l. For a proposed design with a nonstorage-type water heater, a 40-gallon storage-type water heater with the prevailing federal minimum energy factor for the same fuel as the predominant heating fuel type shall be assumed. For the case of a proposed design without a proposed water heater, a 40-gallon storage-type water heater with the prevailing federal minimum efficiency for the same fuel as the predominant heating fuel type shall be assumed for both the proposed design and standard reference design.
m. Energy savings resulting from specification of a natural gas furnace with minimum 90% AFUE in climate zones 4-8 shall not be utilized in calculating the annual energy cost of the *proposed design*.

TABLE R406.4.2 (2) (N1106.4.2(2))
DEFAULT DISTRIBUTION SYSTEM EFFICIENCIES FOR PROPOSED DESIGNS[a]

DISTRIBUTION SYSTEM CONFIGURATION AND CONDITION	FORCED AIR SYSTEMS	HYDRONIC SYSTEMS[b]
Distribution system components located in unconditioned space		0.95
Untested distribution systems entirely located in conditioned space[c]	0.88	1
"Ductless" systems[d]	1	

For SI: 1 cubic foot per minute = 0.47 L/s, 1 square foot = 0.093m2, 1 pound per square inch = 6895 Pa, 1 inch water gauge = 1250 Pa.
a. Default values given by this table are for untested distribution systems, which must still meet minimum requirements for duct system insulation.
b. Hydronic systems shall mean those systems that distribute heating and cooling energy directly to individual spaces using liquids pumped through closed-loop piping and that do not depend on ducted, forced airflow to maintain space temperatures.
c. Entire system in conditioned space shall mean that no component of the distribution system, including the air-handler unit, is located outside of the conditioned space.
d. Ductless systems shall be allowed to have forced airflow across a coil but shall not have any ducted airflow external to the manufacturer's air-handler enclosure.

TABLE R406.4.2(3) (N1106.4.2(3))
INSULATION AND FENESTRATION BASELINES BY COMPONENT[a]

CLIMATE ZONE	FENESTRATION U-FACTOR[b]	SKYLIGHT[b] U-FACTOR	GLAZED FENESTRATION SHGC[b]	CEILING R-VALUE	WOOD FRAME WALL R-VALUE	MASS WALL R-VALUE[c]	FLOOR R-VALUE	BASEMENT[d] WALL R-VALUE	SLAB[e] R-VALUE & DEPTH	CRAWL SPACE[d] WALL R-VALUE
1	1.2	0.75	0.30	30	13	3/4	13	0	0	0
2	0.65[f]	0.75	0.30	30	13	4/6	13	0	0	0
3	0.50[f]	0.65	0.30	30	13	5/8	19	5/13[g]	0	5/13
4 except Marine	0.35	0.60	NR	38	13	5/10	19	10/13	10, 2 ft	10/13
5 and Marine 4	0.35	0.60	NR[h]	38	20 or 13+5[i]	13/17	30[j]	10/13	10, 2 ft	10/13
6	0.35	0.60	NR	49	20 or 13+5[i]	15/19	30[j]	15/19	10, 4 ft	10/13
7 and 8	0.35	0.60	NR	49	21	19/21	38[j]	15/19	10, 4 ft	10/13

For SI: 1 foot = 304.8 mm.
a. R-values are minimums. U-factors and SHGC are maximums. Insulation material used in layers, such as framing cavity insulation and insulating sheathing, shall be summed to compute the component R-value. The manufacturer's settled R-value shall be used for blown insulation. Computed R-values shall not include an R-value for other building materials or air films.
b. The fenestration U-factor column excludes skylights. The SHGC column applies to all glazed fenestration. The use of an area-weighted average of fenestration products more than 50-percent glazed satisfies the SHGC requirements.
c. The second R-value applies where more than half the insulation is on the interior of the mass wall.
d. "15/19" means R-15 continuous insulated sheathing on the interior or exterior of the home or R-19 cavity insulation at the interior of the basement wall. "15/19" is also met with R-13 cavity insulation on the interior of the basement wall plus R-5 continuous insulated sheathing on the interior or exterior of the home. "10/13" means R-10 continuous insulated sheathing on the interior or exterior of the home or R-13 cavity insulation at the interior of the basement wall.
e. R-5 shall be added to the required slab edge R-values for heated slabs. Insulation depth shall be the depth of the footing or 2 feet, whichever is less in Zones 1 through 3 for heated slabs.
f. For impact rated fenestration complying with Section R301.2.1.2 of the International Residential Code or Section 1609.1.2 of the International Building Code, the maximum U-factor shall be 0.75 in Zone 2 and 0.65 in Zone 3.
g. Basement wall insulation is not required in warm-humid locations as defined by Figure R301.1 and Table R301.1.
h. There are no SHGC requirements in the Marine Zone.
i. "13+5" means R-13 cavity insulation plus R-5 insulated sheathing. If structural sheathing covers 25 percent or less of the exterior, insulating sheathing is not required where structural sheathing is used. If structural sheathing covers more than 25 percent of exterior, structural sheathing shall be supplemented with insulated sheathing of at least R-2.
j. Or insulation sufficient to fill the framing cavity, R-19 minimum.

TABLE R406.4.2(4) (N1106.4.2(4))
EQUIVALENT U-FACTORS[a,b, c]

CLIMATE ZONE	FENESTRATION U-FACTOR[d]	SKYLIGHT U-FACTOR	CEILING U-FACTOR	FRAME WALL U-FACTOR	MASS WALL U-FACTOR[e]	FLOOR U-FACTOR	BASEMENT WALL U-FACTOR	CRAWL SPACE WALL U-FACTOR
1	1.20	0.75	0.035	0.082	0.197	0.064	0.360	0.477
2	0.65	0.75	0.035	0.082	0.165	0.064	0.360	0.477
3	0.50	0.65	0.035	0.082	0.141	0.047	0.091[f]	0.136
4 except Marine	0.35	0.60	0.030	0.082	0.141	0.047	0.059	0.065
5 and Marine 4	0.35	0.60	0.030	0.057	0.082	0.033	0.059	0.065
6	0.35	0.60	0.026	0.057	0.060	0.033	0.050	0.065
7 and 8	0.35	0.60	0.026	0.057	0.057	0.028	0.050	0.065

a. An assembly with a U-factor equal to or less than that specified in Table R406.4.2 (4) shall be permitted as an alternative to the R-value in Table R406.4.2 (3).
b. If the total building thermal envelope UA (sum of U- factor times assembly area) is less than or equal to the total UA resulting from using the U- factors in Table R406.4.2 (4) (multiplied by the same assembly area as in the proposed building), the building shall be considered in compliance with Table R406.4.2 (3). The UA calculation shall be done using a method consistent with the ASHRAE Handbook of Fundamentals and shall include the thermal bridging effects of framing materials. The SHGC requirements shall be met in addition to UA compliance.
c. Nonfenestration U-factors shall be obtained from measurement, calculation or an approved source.
d. The use of an area-weighted average of fenestration products satisfies the U–factor requirements.
e. When more than half the insulation is on the interior, the mass wall U-factors shall be a maximum of 0.17 in Zone 1, 0.14 in Zone

2, 0.12 in Zone 3, 0.10 in Zone 4 except Marine, and the same as the frame wall U-factor in Marine Zone 4 and Zones 5 through 8.
f. Basement wall U-factor of 0.360 in warm-humid locations as defined by Figure R301.1 and Table R301.1.

TABLE R406.4.2(5) (IRC N1106.4.2(5))
ENERGY COST COMPARISON U- AND SHGC-FACTORS[a]

CLIMATE ZONE	FENESTRATION U-FACTOR	GLAZED FENESTRATION SHGC[b]	SKYLIGHT U-FACTOR	CEILING U-FACTOR	FRAME WALL U-FACTOR	MASS WALL U-FACTOR[c]	FLOOR U-FACTOR	BASEMENT WALL U-FACTOR	CRAWL SPACE WALL U-FACTOR
1	0.50	0.25	0.75	0.035	0.082	0.197	0.064	0.360	0.477
2	0.40	0.25	0.65	0.030	0.082	0.165	0.064	0.360	0.477
3	0.35	0.25	0.55	0.030	0.057	0.098	0.047	0.091[d]	0.136
4 except Marine	0.35	0.40	0.55	0.026	0.057	0.098	0.047	0.059	0.065
5 and Marine	0.32	NR	0.55	0.026	0.057	0.082	0.033	0.050	0.055
6	0.32	NR	0.55	0.026	0.048	0.060	0.033	0.050	0.055
7 and 8	0.32	NR	0.55	0.026	0.048	0.057	0.028	0.050	0.055

a. Nonfenestration U-factors shall be obtained from measurement, calculation or an approved source.
b. The SHGC column applies to all glazed fenestration. Exception: Skylights are excluded from glazed fenestration SHGC requirements in Climate Zones 1 through 3 where the SHGC for such skylights does not exceed 0.30.
c. Where more than half the insulation is on the interior, the mass wall U-factors shall be not greater than 0.17 in Climate Zone 1, 0.14 in Climate Zone 2, 0.12 in Climate Zone 3, 0.087 in Climate Zone 4 except Marine, 0.065 in Climate Zone 5 and Marine 4, and 0.057 in Climate Zones 6 through 8.
d. Basement wall U-factor of 0.360 in warm-humid locations as defined by Figure R301.1 and Table R301.1.

Reason: This proposal provides a new alternative performance compliance path in the residential section of the IECC that results in much more energy efficient homes by providing greater flexibility and compliance options for builders and design professionals.

Specifically, the proposal adds a new Section R406 – Optional Performance Compliance - and modifies specific sections of the IECC to facilitate the use of this new performance alternative. With these proposed changes in place, users would have the option to comply as currently required using either the prescriptive or performance approach (Section 405) or they can choose to comply with the Optional Performance Compliance in Section R406. Choosing to comply with Section R406 would however result in a home that has an annual energy cost that is less than or equal to 95% of the annual energy cost of a home built in compliance with the current code. Put simply, this alternative path is more stringent than the current IECC because it results in homes that are 5% more energy efficiency than one built in compliance with the current code.

In order to make new Section R406 as easy to understand and use as possible, this section mirrors the format of the current Section R405 performance alternative. That includes the requirement to comply with the current "mandatory" requirements in Chapter 4. Of critical importance however, greater flexibility over the current performance alternative in Section R405 is achieved with the inclusion of much more robust compliance options in the procedures for configuring and analyzing the standard reference design and the proposed design as outlined in Table R406.4.2 (1). These more robust compliance options include the reintroduction of the HVAC equipment trade-offs that were a part of the IECC until they were eliminated in the 2009 edition. Elimination of the ability to take advantage of more efficient heating and cooling equipment has been one of the biggest factors in the lack of support the 2009 and 2012 editions of the IECC have received in the marketplace not only by home builders but by code officials and elected officials as well. It makes little sense to require extremely stringent envelope and other requirements while at the same time greatly discouraging the use of more efficient HVAC equipment. Either we want builders and designers to choose more efficient options or we don't – and current IECC requirements send a clear message that we do not want to encourage the choice of more innovative and efficient heating and cooling systems. Section R406 compliance directly addresses this issue.

Additional compliance options in the new Optional Performance Compliance path include the ability to take advantage of designs with less glazing than the minimum percentage of glazing in the current performance alternative in Section R405. In addition, the calculation procedure in the new Section R406 includes the much more reasonable U-Factors and SHGC Factors from the 2009 IECC, while also requiring the annual energy cost of the proposed design to be 5% MORE efficient than a home built to the current IECC requirements. Again, the prescriptive path R- and U-Factor and SHGC tables in the current IECC are a major contributing factor in the lack of support, adoption and enforcement of the 2012 IECC. Those problems can be greatly alleviated by allowing builders and designers to have the maximum amount of flexibility in determining compliance with the code. That is especially true given that in exchange for the ability to design and build homes with proven market acceptance in more cost-effective ways, this proposal by a group of the largest U. S. home building companies who build over 80,000 homes in the U. S. each year would actually make the annual energy cost target even more stringent than currently required.

As previously discussed, the heart of this proposal is the new Optional Performance Compliance in Section R406. While large portions of Section R406 mirror the language in the current Section R405, specific sections deserve greater explanation.

- Section R406.2: this section mirrors the current R405.2 language, including the requirement that the "mandatory" provisions in Chapter 4 be met by designs complying with R406.
- Section R406.3: like the current Section R405.3, this section outlines the primary performance compliance concepts and includes the requirement for the annual energy cost of the proposed design to equal or be less than 95% of the annual energy cost of a home built to the current Chapter 4 requirements. This is accomplished by evaluating the annual energy cost of the proposed design versus compliance with the "mandatory" sections in Chapter 4 PLUS the U-Factors and

SHGC Factors found in the 2012 IECC (Tables R402.1.1 and R402.1.3) which are contained in Table R406.4.2 (5). Section R406.3 also references Table R406.4.2 (1) outlining the configuration and analysis of the proposed design using prescriptive requirements in the 2009 code.

- Sections R406.4 Documentation, R406.5 Calculation procedure, and R406.6 Calculation software tools mirror the requirements in the current Section R405 performance alternative.
- Table R406.4.2 (1) contains the standard reference and proposed design parameters for all building component elements.
- Tables R406.4.2 (4) and R406.4.2 (3) contain the insulation and fenestration baseline factors from the 2009 IECC used in the calculation based on the parameters in Table R406.4.2 (1).

Table R406.4.2 (5) contains the energy cost comparison U-Factors and SHGC factors used in calculating the annual energy cost of a home built in compliance with the current Chapter 4 requirements.

Cost Impact: The code change proposal will not increase the cost of construction.

RE10-13

Public Hearing:	Committee:	AS	AM	D
	Assembly:	ASF	AMF	DF

R401.2-EC-BURTON.DOC

RE11 – 13
R401.2 (IRC N1101.15)

Proponent: Don Surrena, CBO, representing National Association of Home Builders (dsurrena@nahb.org)

Revise as follows:

R401.2 (N1101.15) Compliance. Projects shall comply with ~~Sections identified as "mandatory" and with either sections identified as "prescriptive" or the performance approach in Section R405.~~ one of the following:

1. Sections R401 through R404 or;
2. Section R405 and the provisions of Sections R401 through R404 labeled "Mandatory" or
3. *Approved* computer software, worksheets or compliance manuals that also meet the provisions of Sections R401 through R404 labeled "Mandatory" and the intent of this code or;
4. Buildings certified as complying with the energy efficiency requirements of an above code program in accordance with Section R102.1.1.

Reason: This amendment clarifies the section. It also provides for alternative options such as industry rating programs or other programs to be recognized as complying with the IECC.

Cost Impact: The code change proposal will not increase the cost of construction.

RE11-13

Public Hearing:	Committee:	AS	AM	D
	Assembly:	ASF	AMF	DF

R401.2-EC-SURRENA

RE12 – 13
R401.2 (IRC N1101.15)

Proponent: Jeremiah Williams, representing U.S. Department of Energy (jeremiah.williams@ee.doe.gov)

Revise as follows:

R401.2 (N1101.15) Compliance. Projects shall comply with Sections identified as "mandatory" and with either of the following: ~~sections identified as "prescriptive" or the performance approach in Section R405.~~

1. Sections identified as "prescriptive."
2. Section R405.

Reason: The proposed change provides a clarification. The current wording in the code has led to some confusion as to whether the mandatory lighting provisions of Section R404 are required when a home complies via the performance path of Section R405.

Cost Impact: The code change proposal will not increase the cost of construction.

RE12-13

Public Hearing:	Committee:	AS	AM	D
	Assembly:	ASF	AMF	DF

R401.2-EC-WILLIAMS

RE13 – 13
R401.3 (IRC N1101.16)

Proponent: Brian Dean, Energy Efficient Codes Coalition; Garrett Stone, Brickfield Burchette Ritts & Stone, PC; Jeff Harris, Alliance to Save Energy; Harry Misuriello, American Council for an Energy-Efficient Economy; and Bill Prindle, Energy Efficient Codes Coalition (Brian.Dean@icfi.com)

Revise as follows:

R401.3 (N1101.16) Certificate (Mandatory). A permanent certificate shall be completed and shall be posted ~~on or in the electrical distribution panel~~ by the builder or registered design professional at either an *approved accessible* location inside the *building* or electronically in an *accessible* certificate database maintained by an approved agency or the jurisdiction, with a permanent notification of the location of such record posted at an approved *accessible* location inside the building. A copy of the certificate shall also be filed in the land records. Where posted on the electrical distribution panel, t~~T~~he certificate shall not cover or obstruct the visibility of the circuit directory label, service disconnect label or other required labels. The certificate shall list the ~~predominant~~ *R*-values of insulation installed in or on ceiling/roof, walls, foundation (slab, *basement wall*, crawlspace wall and/or floor) and ducts outside conditioned spaces; *U*-factors for fenestration and the solar heat gain coefficient (SHGC) of fenestration, and the results from any required duct system and building envelope air leakage testing done on the building. Where there is more than one value for each component category, the certificate shall list either all of the values with their associated areas or the area-weighted average value for that component category ~~covering the largest area~~. The certificate shall list the types and efficiencies of heating, cooling and service water heating equipment. Where a gas-fired unvented room heater, electric furnace, or baseboard electric heater is installed in the residence, the certificate shall list "gas-fired unvented room heater," "electric furnace" or "baseboard electric heater," as appropriate. An efficiency level shall not be *listed* for gas-fired unvented room heaters, electric furnaces or electric baseboard heaters.

Reason: The purpose of this code change is to provide reasonable improvements to the certificate and alternatives to the current posting requirement that will meet the intent of the provision and improve the usability of the certificate. Specifically , the change will allow the certificate to be permanently posted at an accessible location other than the electrical panel, including the option of an electronic version that may be maintained off-site (with a permanent notice posted in the home). A copy of the certificate would also be required to be filed with the land record, where it can most easily be located in the future.

The proposal also clarifies that actual U-factors and R-values (or area-weighted averages) must be listed on the label. The current certificate requirement, which only includes listing the value for components "covering the largest area," does not give enough useful information to future owners or occupants of the home who may be replacing or retrofitting components in the home. The proposed additional information for the certificate should already be well known by the builder or design professional at the time of construction, since it is required for code compliance, so there should be no significant additional work or cost associated with adding these details.

Cost Impact: The code change proposal will not increase the cost of construction.

RE13-13

Public Hearing:	Committee:	AS	AM	D
	Assembly:	ASF	AMF	DF

R401.3-EC-DEAN-HARRIS-MISURIELLO-PRINDLE-STONE

RE14 – 13
R401.3 (IRC N1101.16)

Proponent: Andrei Moldoveanu, representing National Electrical Manufacturers Association (NEMA) (and_moldoveanu@nema.org**)**

R401.3 (N1101.16) Certificate (Mandatory). A permanent certificate shall be completed by the builder or registered design professional and posted on ~~or in the electrical distribution panel~~ a wall in the space where the furnace is located, a utility room, or an approved location inside the building ~~by the builder or registered design professional~~. ~~The certificate shall not cover or obstruct the visibility of the circuit directory label, service disconnect label or other required labels.~~ The certificate shall list the predominant *R*values of insulation installed in or on ceiling/roof, walls, foundation (slab, *basement wall,* crawlspace wall and/or floor) and ducts outside conditioned spaces; *U*-factors for fenestration and the solar heat gain coefficient (SHGC) of fenestration, and the results from any required duct system and building envelope air leakage testing done on the building. Where there is more than one value for each component, the certificate shall list the value covering the largest area. The certificate shall list the types and efficiencies of heating, cooling and service water heating equipment. Where a gasfired unvented room heater, electric furnace, or baseboard electric heater is installed in the residence, the certificate shall list "gas-fired unvented room heater," "electric furnace" or "baseboard electric heater," as appropriate. An efficiency shall not be *listed* for gas-fired unvented room heaters, electric furnaces or electric baseboard heaters**.**

Reason:

1. Certificates placed on or in the electrical distribution panel may become destroyed because of the location of the panel. Panels for many buildings in the Southwest portion of the United States are located outside of the building; thereby, causing certificates on or in these panels to become destroyed due to weather.
2. Safety. Additional printed material (such as the energy certificate) on electrical distribution panel makes it difficult to see the warning labels that or located on or in the panel.
3. Certificates located on or in the electrical panel are not very visible due to the location of the panels; thereby, rendering the certificate useless.

Cost Impact: The code change proposal will not increase the cost of construction.

RE14-13

Public Hearing:	Committee:	AS	AM	D
	Assembly:	ASF	AMF	DF

R401.3-EC-MOLDOVEANU

RE15 – 13
R401.3 (IRC N1101.16)

Proponent: Wayne Stoppelmoor, representing Schneider Electric

Revise as follows:

R401.3 (N1101.16) Certificate (Mandatory). A permanent certificate shall be completed by the builder or registered design professional and posted on ~~or in the electrical distribution panel~~ a wall in the space where the furnace is located, a utility room, or an approved location ~~by the builder or registered design professional~~. ~~The certificate shall not cover or obstruct the visibility of the circuit directory label, service disconnect label or other required labels.~~ The certificate shall list the predominant *R*values of insulation installed in or on ceiling/roof, walls, foundation (slab, *basement wall,* crawlspace wall and/or floor) and ducts outside conditioned spaces; *U*-factors for fenestration and the solar heat gain coefficient (SHGC) of fenestration, and the results from any required duct system and building envelope air leakage testing done on the building. Where there is more than one value for each component, the certificate shall list the value covering the largest area. The certificate shall list the types and efficiencies of heating, cooling and service water heating equipment. Where a gasfired unvented room heater, electric furnace, or baseboard electric heater is installed in the residence, the certificate shall list "gas-fired unvented room heater," "electric furnace" or "baseboard electric heater," as appropriate. An efficiency shall not be *listed* for gas-fired unvented room heaters, electric furnaces or electric baseboard heaters.

Reason:
1. Certificates placed on or in the electrical distribution panel may become destroyed because of the location of the panel. Panels for many buildings in the Southwest portion of the United States are located outside of the building; thereby, causing certificates on or in these panels to become destroyed due to weather.
2. Safety. Additional printed material (such as the energy certificate) on electrical distribution panel makes it difficult to see the warning labels that or located on or in the panel.
3. Certificates located on or in the electrical panel are not very visible due to the location of the panels; thereby, rendering the certificate useless.

Cost Impact: None

RE15-13

Public Hearing:	Committee:	AS	AM	D
	Assembly:	ASF	AMF	DF

R401.3-EC-STOPPELMOOR

RE16 – 13
R401.3 (IRC N1101.16)

Proponent: Brenda A. Thompson, Clark County Development Services, Las Vegas NV, representing ICC Sustainability, Energy & High Performance Building Code Action Committee (bat@clarkcounty.gov)

Revise as follows:

R401.3 (N1101.16) Certificate (Mandatory). A permanent certificate shall be completed and posted ~~on or in the electrical distribution panel~~ by the builder or registered design professional at an approved location inside the building. Where located on an electrical distribution panel, the certificate shall not cover or obstruct the visibility of the circuit directory label, service disconnect label or other required labels. The certificate shall list the predominant *R* values of insulation installed in or on ceiling/roof, walls, foundation (slab, *basement wall,* crawlspace wall and/or floor) and ducts outside conditioned spaces; *U*-factors for fenestration and the solar heat gain coefficient (SHGC) of fenestration, and the results from any required duct system and building envelope air leakage testing done on the building. Where there is more than one value for each component, the certificate shall list the value covering the largest area. The certificate shall list the types and efficiencies of heating, cooling and service water heating equipment. Where a gasfired unvented room heater, electric furnace, or baseboard electric heater is installed in the residence, the certificate shall list "gas-fired unvented room heater," "electric furnace" or "baseboard electric heater," as appropriate. An efficiency shall not be *listed* for gas-fired unvented room heaters, electric furnaces or electric baseboard heaters**.**

Reason: This proposal was submitted by the ICC Sustainability Energy and High Performance Code Action Committee (SEHPCAC). The SEHPCAC was established by the ICC Board of Directors to pursue opportunities to improve and enhance assigned International Codes or portion thereof. This includes both the technical aspects of the codes as well as the code content in terms of scope and application of referenced standards. Since its inception in July, 2011, the SEHPCAC has held 3 open meetings and over 30 workgroup calls which included members of the SEHPCAC as well as any interested party to discuss and debate proposed changes and public comments. Related documentation and reports are posted on the SEHPCAC website at: http://www.iccsafe.org/cs/SEHPCAC/Pages/default.aspx.
Reasons for this specific proposal:
1. Certificates placed on or in the electrical distribution panel may become destroyed because of the location of the panel. Panels for many buildings in the Southwest portion of the United States are located outside of the building; thereby, causing certificates on or in these panels to become destroyed due to weather.
2. Safety. Additional printed material (such as the energy certificate) on electrical distribution panel makes it difficult to see the warning labels that or located on or in the panel.
3. Certificates located on or in the electrical panel are not very visible due to the location of the panels; thereby, rendering the certificate useless.
4. Certificates should be located where they are likely to survive over time. Perhaps that location is in a garage next to a water heater or furnace. However such arrangement is not universally common in design. Short of finding a universally acceptable location, the proposal requires the local building official to approve the locations appropriate for the local jurisdiction. The location should be an interior locations so that it isn't lost to weather induced deterioration.

Cost Impact: The proposal is editorial in nature and will not affect the cost of construction..

RE16-13

Public Hearing:	Committee:	AS	AM	D
	Assembly:	ASF	AMF	DF

R401.3-EC-THOMPSON-SEHPCAC

RE17– 13

R402.1 (IRC N1102.1), R402.1.1 (IRC N1102.1.1), Table 402.1.1 (IRC Table N1102.1.1) R402.1.2 (NEW) (IRC N1102.1.2 (NEW)), R402.1.2.1 (IRC N1102.1.2.1), R402.1.3 (IRC N1102.1.3), Table R402.1.3 (Table N1102.1.3), R402.1.4 (IRC N1102.1.4)

Proponent: Jay Crandell, P.E., ARES Consulting, representing Foam Sheathing Committee / American Chemistry Council (Jcrandell@aresconsulting.biz)

Revise as follows:

R402.1 (N1102.1) General (Prescriptive). The *building thermal envelope* shall meet the requirements of Section~~s~~ R402.1.1, R402.1.2, or R402.1.3 based on the climate zone specified in Chapter 3. ~~through R402.1.4.~~

R402.1.1 (N1102.1.1) ~~Insulation and fenestration criteria~~ *U*-factor method. ~~The *building thermal envelope* shall meet the requirements of Table R402.1.1~~ An assembly shall have a *U*-factor equal to or less than that specified in Table R402.1.1. In addition, glazed fenestration SHGC and the equivalent of slab insulation R-value and depth requirements in Table R402.1.2 shall be met. ~~based on the climate zone specified in Chapter 3.~~

R402.1.2 (N1102.1.2) R-value method. As an alternative means of complying with Section R402.1.1, insulation R-values, slab insulation depth, Fenestration U-factors and SHGC requirements shall comply with Table R402.1.2. Alternatives to the R-value requirements in Table R402.1.2 shall comply with Section R402.1.1.

~~**R402.1.2 (N1102.1.2)**~~ **R402.1.2.1 (N1102.1.2.1) *R*-value computation.** Insulation materials used in layers to provide~~, such as framing~~ the cavity insulation component or ~~and insulating sheathing~~ continuous insulation component required by Section R402.1.2, shall be summed to compute the corresponding component *R*-value. The manufacturer's settled *R*-value shall be used for blown insulation. Computed *R*-values shall not include an *R*-value for other building materials or air films.

~~**R402.1.3 (N1102.1.3) *U*-factor alternative.** An with a *U*-factor equal to or less than that specified in Table R402.1.3 shall be permitted as an alternative to the *R*-value in Table R402.1.1.~~

~~**R402.1.4 (N1102.1.4)**~~ **R402.1.3 (N1102.1.3) Total UA method.** ~~If t~~The total *building thermal envelope* UA (sum of *U*-factor times assembly area) ~~is~~ shall be less than or equal to the total UA resulting from using the *U*-factors in Table R402.1.~~2~~1 (multiplied by the same assembly area as in the proposed building)~~, the building shall be considered in compliance with Table R402.1.1~~. The UA calculation shall be done using a method consistent with the ASHRAE *Handbook of Fundamentals* and shall include the thermal bridging effects of framing materials. The glazed fenestration SHGC and the equivalent of slab R-value and depth requirements in Table R402.1.2 shall be met in addition to UA compliance.

TABLE ~~R402.1.1 (N1102.1.2)~~ R402.1.2 (N1102.1.2)
INSULATION AND FENESTRATION R-VALUE REQUIREMENTS BY COMPONENT[a]

(Portions of Table not shown remain unchanged)

TABLE ~~R402.1.3 (N1102.1.3)~~ R402.1.1 (N1102.1.1)
~~EQUIVALENT~~ ASSEMBLY U-FACTOR~~S~~ REQUIREMENTS[a]

(Portions of Table not shown remain unchanged)

Reason: This proposal provides a needed re-organization and clarification of insulation requirements for the building thermal envelope. One of the technical concerns driving this proposal is that there are variations in the levels of efficiency between the current U-factor and R-value requirements. This happens as accommodations are made for common product R-value and various building methods. There are other proposals that are attempting to address these issues. Also, the R-value table is based on an insulation component approach using nominal R-values and the parameters and assumptions necessary to determine an equivalent U-factor are not disclosed in the code and are subject to varying interpretations. It was for this reason that the code has intended that the U-factor table serve as a baseline for alternative insulation strategies. This proposal clarifies that intent. From a formatting perspective, the proposal clearly delineates three methods for compliance. First, it establishes the U-factor method as the primary basis and approach for energy efficiency requirements. Second, the "cook-book" R-value approach is retained as simple means of complying with the required U-factors, also clarifying that alternative R-value solutions shall comply with the U-factor method. Third, it retains the total UA method and makes some editorial improvements.

Cost Impact: The code change proposal will not increase the cost of construction.

.

RE17-13

Public Hearing:	Committee:	AS	AM	D
	Assembly:	ASF	AMF	DF

R402.1-EC-CRANDELL

RE18– 13
R402.1 (IRC N1102.1), R402.1.1 (NEW) (IRC N1102.1.1 (NEW))

Proponent: Michael D. Fischer, Kellen Company, representing the Center for the Polyurethanes Industry (mfischer@kellencompany.com)

Revise as follows:

R402.1 (N1102.1) General (Prescriptive). The *building thermal envelope* shall meet the requirements of Sections R402.1.1 through ~~R402.1.4~~. R402.1.5.

R402.1.1 (N1102.1.1) Vapor retarder. Wall assemblies in the *building thermal envelope* shall comply with the vapor retarder requirements of Section R702.7 of the *International Residential Code* or Section 1405.3 of the *International Building Code* as applicable.

Reason: The IRC contains detailed vapor retarder provisions that apply specified R-Values for continuous insulation for vapor and condensation control. It is important to ensure that compliance to the envelope requirements of the energy code are coordinated with other building code requirements. While such a cross-reference is not necessary for most building requirements, the vapor retarder provisions are the only place in the IRC that a specific thermal performance provision is called out. This proposal provides the necessary coordination.

Cost Impact: The proposal will not affect the cost of construction..

Note: If this change is approved, it would be shown in Chapter 11 of the IRC without the reference to the IBC as follows:
N1102.1.1 Vapor retarder. Wall assemblies in the *building thermal envelope* shall comply with the vapor retarder requirements of Section R702.7.

RE18-13

Public Hearing:	Committee:	AS	AM	D
	Assembly:	ASF	AMF	DF

R402.1.1 (NEW)-EC-FISCHER

RE19 – 13

Table R402.1.1 (IRC Table N1102.11), R401.2.3, (IRC Table N1102.1.3)

Proponent: Thomas S Zaremba, Roetzel & Andress, representing Pikington North America and AGC Glass Company North America (tzaremba@ralaw.com)

Revise as follows:

TABLE R402.1.1 (N1102.1.1)
INSULATION AND FENESTRATION REQUIREMENTS BY COMPONENT[a]

CLIMATE ZONE	FENESTRATION		SKYLIGHT[b] *U*-FACTOR	~~GLAZED FENESTRATION SHGC[b,e]~~	CEILING *R*-VALUE	WOOD FRAME WALL *R*-VALUE	MASS WALL *R*-VALUE[i]	FLOOR *R*-VALUE	BASEMENT[c] WALL *R*-VALUE	SLAB[d] *R*-VALUE & DEPTH	CRAWL SPACE WALL *R*-VALUE
	U-FACTOR[b]	GLAZED FENESTRATION SHGC[b,e]									
1	NR	≤ 0.25	0.75	~~0.25~~	30	13	¾	13	0	0	0
2	0.40	≤ 0.25	0.65	~~0.25~~	38	13	4/6	13	0	0	0
3	0.35	≤ 0.25	0.55	~~0.25~~	38	19	8/13	19	5/13[f]	0	5/13
4 except Marine	0.35	≤ 0.40	0.55	~~0.40~~	49	19	8/13	19	10/13	10, 2 ft	10/13
5 and Marine 4	~~0.32~~ 0.25	NR	0.55	~~NR~~	49	30[g]	13/17	30[g]	15/19	10, 2 ft	15/19
	= 0.26	≥ 0.22									
	= 0.27	≥ 0.27									
	= 0.28	≥ 0.32									
	= 0.29	≥ 0.37									
	=0.30	≥ 0.42									
6	~~0.32~~ 0.25	NR	0.55	~~NR~~	49	30[g]	15/20	30[g]	15/19	10, 4 ft	15/19
	= 0.26	≥ 0.22									
	= 0.27	≥ 0.27									
	= 0.28	≥ 0.32									
	= 0.29	≥ 0.37									
	= 0.30	≥ 0.42									
7 and 8	~~0.32~~ 0.25	NR	0.55	~~NR~~	49	30[g]	19/21	38[g]	15/19	10, 4 ft	15/19
	= 0.26	≥ 0.22									
	= 0.27	≥ 0.27									
	= 0.28	≥ 0.32									
	= 0.29	≥ 0.37									
	= 0.30	≥ 0.42									

For SI: 1 foot = 304.8 mm. 30

a. *R*-values are minimums. Except as otherwise noted. *U*-factors ~~and SHGC~~ are maximums. When insulation is installed in a cavity which is less than the label or design thickness of the insulation, the installed *R*-value of the insulation shall not be less than the *R*-value specified in the table.

(*Portions of Table not shown remain unchanged)*

TABLE R402.1.3 (N1102.1.3)
EQUIVALENT *U*-FACTORS[a]

CLIMATE ZONE	FENESTRATION *U*-FACTOR[b]	SKYLIGHT[b] *U*-FACTOR	CEILING *U*-FACTOR	FRAME WALL *U*-FACTOR	MASS WALL *U*-FACTOR[b]	FLOOR *U*-FACTOR	BASEMENT WALL *U*-FACTOR	CRAWL SPACE WALL *U*-FACTOR
1	0.50	0.75	0.035	0.082	0.197	0.064	0.360	0.477
2	0.40	0.65	0.030	0.082	0.165	0.064	0.360	0.477
3	0.35	0.55	0.030	0.057	0.098	0.047	0.091[c]	0.136
4 except Marine	0.35	0.55	0.026	0.057	0.098	0.047	0.059	0.065
5 and Marine 4	~~0.32~~ 0.25	0.55	0.026	0.057	0.082	0.033	0.050	0.055
6	~~0.32~~ 0.25	0.55	0.026	0.048	0.060	0.033	0.050	0.055
7 and 8	~~0.32~~ 0.25	0.55	0.026	0.048	0.057	0.028	0.050	0.055

(*Portions of Table not shown remain unchanged)*

Reason: In northern climate zones 5 through 8, this proposal would reduce the prescriptive U-factor to a maximum of 0.25, but provide 5 alternative, U-factor and SHGC combinations that all yield equivalent energy performance to windows having a 0.25 U-factor. Adopting this proposal will provide builders and homeowners with the flexibility of selecting from a number of different frame and glass types to achieve significantly greater energy savings. Such flexibility will also significantly increase the number of products capable of achieving code compliance, thus, increasing competition and, ultimately lowering the cost of compliance.

In 2008, the United States Department of Energy released the results of a regression model developed by Lawrence Berkley National Laboratories ("LBNL") revealing how changes in U-factor and SHGC affect aggregate energy consumption in northern climates. A detailed discussion of the model is found at http://windows.lbl.gov/EStar2008. The LBNL model clearly shows that in northern climates, a 0.05 increase in SHGC produces the same energy benefits as a 0.01 decrease in U-factor. Accordingly, windows with incrementally 0.01 higher U-factors and 0.05 higher SHGCs all yield the same energy benefits.

Using the results of the LBNL regression model, this proposal establishes a prescriptive 0.25 U-factor in zones 5 through 8 and then takes U-factors up in 0.01 increments from 0.25 to 0.30 while simultaneously raising minimum SHGCs in 0.05 increments. All of the matching U-factors and SHGCs will yield energy performance equivalent to the prescriptive 0.25 U-factor.

The US Energy Star Program has already implemented the results of the LBNL model and uses the same types of energy equivalent trade-offs in northern climates. In fact, trade-offs like those in this proposal have been in use in the United States Energy Star Windows Program ever since April 7, 2009, when the Department of Energy issued its Version 5.0 criteria for Energy Star Windows, Doors and Skylights. Indeed, the 0.27 U-factor coupled with a 0.27 SHGC and a 0.28 U-factor coupled with a 0.32 SHGC in the current proposal match the most recent Energy Star trade-offs released by the Environmental Protection Agency (EPA) in its Version 6.0, Draft 1 Energy Star criteria dated July of 2012. In addition to being used in the United States, the Canadian Energy Star Program also reaches essentially the same trade-off results, by matching higher U-factors with higher SHGC values through the application of a formulation known as Energy Ratings, or ERs.

Achieving a 0.25 U-factor is technologically feasible using a double, not a triple, glazed assembly. In fact, all five (5) of the primary glass manufacturers in the United States, offer a low-e coated glass made specifically for use on the #4 surface (or the surface found inside the home) of a double glazed assembly. In the right frame, advent of #4 surface low-e products enable windows to achieve a 0.25 or lower U-factors using double glazed windows. This proposal builds on that technology and the methodology in use in the U.S. Energy Star Windows Program since 2009 of pairing U-factors with SHGCs to yield an energy performance equivalent to a prescriptive U-factor. In this proposal, U-factors are matched to SHGCs to yield the equivalent energy performance of a 0.25 U-factor.

This proposal, if adopted, will significantly increase builder and consumer choice, ultimately lower the costs of code compliance and significantly reduce the aggregate amount of energy consumed by homes in the United States.

Cost Impact: The code change proposal will increase the cost of construction.

RE19-13

Public Hearing:	Committee:	AS	AM	D
	Assembly:	ASF	AMF	DF

R402.1.1T#2-EC-ZAREMBA

RE20 – 13

Table R402.1.1 (IRC Table N1102.1.1), Table R402.1.3 (IRC Table N1102.1.3)

Proponent: Dr. Thomas D. Culp, Birch Point Consulting LLC, representing the Glazing Industry Code Committee (culp@birchpointconsulting.com)

Revise as follows:

TABLE R402.1.1 (N1102.1.1)
INSULATION AND FENESTRATION REQUIREMENTS BY COMPONENT[a]

CLIMATE ZONE	FENESTRATION *U*-FACTOR[b]	SKYLIGHT[b] *U*-FACTOR	GLAZED FENESTRATION SHGC[b,e]	CEILING *R*-VALUE	WOOD FRAME WALL *R*-VALUE	MASS WALL *R*-VALUE[i]	FLOOR *R*-VALUE	BASEMENT[c] WALL *R*-VALUE	SLAB[d] *R*-VALUE & DEPTH	CRAWL SPACE[c] WALL *R*-VALUE
1	NR	0.75	0.25	30	13	3 / 4	13	0	0	0
2	0.40[j]	0.65	0.25	38	13	4 / 6	13	0	0	0
3	0.35[j]	0.55	0.25	38	20 or 13+5[h]	8/13	19	5/13[f]	0	5 / 13
4 except Marine	0.35	0.55	0.40	38	20 or 13+5[h]	8 / 13	19	10 / 13	10, 2 ft	10/13
5 and Marine 4	~~0.32~~ 0.25	0.55	NR	49	20 or 13+5[h]	13 / 17	30[g]	15/19	10,2ft	15/19
6	~~0.32~~ 0.25	0.55	NR	49	20+5 or 13+5[h]	15 / 20	30[g]	15/19	10,4ft	15/19
7 and 8	~~0.32~~ 0.25	0.55	NR	49	20+5 or 13+10[h]	19 / 21	38[g]	15/19	10,4ft	15/19

(Portions of Table not shown remain unchanged)

TABLE 402.1.3 (N1102.1.3)
EQUIVALENT *U*-FACTORS[a]

CLIMATE ZONE	FENESTRATION *U*-FACTOR	SKYLIGHT *U*-FACTOR	CEILING *U*-FACTOR	FRAME WALL *U*-FACTOR	MASS WALL *U*-FACTOR[b]	FLOOR *U*-FACTOR	BASEMENT WALL *U*-FACTOR	CRAWL SPACE WALL *U*-FACTOR
1	NR	0.75	0.035	0.082	0.197	0.064	0.360	0.477
2	0.40	0.65	0.030	0.082	0.165	0.064	0.360	0.477
3	0.35	0.55	0.030	0.057	0.098	0.047	0.091[c]	0.136

4 except Marine	0.35	0.55	0.030	0.057	0.098	0.047	0.059	0.065
5 and Marine 4	~~0.32~~ 0.25	0.55	0.026	0.057	0.082	0.033	0.050	0.055
6	~~0.32~~ 0.25	0.55	0.026	0.048	0.060	0.033	0.050	0.055
7 and 8	~~0.32~~ 0.25	0.55	0.026	0.048	0.057	0.028	0.050	0.055

(Portions of Table not shown remain unchanged)

Reason: The purpose of this proposal is to provide the next step in energy efficiency for windows in the northern zones. Window technology has advanced in recent years, allowing multiple new options to achieve higher performance levels at reasonable cost. Specifically, a 0.25 U-factor can be achieved by triple glazing, but it may also be achieved in double glazing by using new high performance frames and spacers, or also by the using two low-e coatings. These "4th surface" low-e coatings are now available from all five of the primary glass manufacturers. While total window costs vary widely based on specific product, window manufacturer, and location, public cost data shows the incremental cost for adding a low-e coating is fairly consistent between $0.25 to $2 per ft2. [1] A reasonable estimate of the incremental cost is $1.50 per ft2, or approximately $30 per window. This is consistent with the estimate by D&R International for the Energy Star Windows program, which estimated the incremental cost for a 0.27 U-factor at $34 per window. [2] For 12 different cities in zones 5-7, a RESFEN analysis estimates the energy savings at $32-73 per year for a typical 2000 ft2 home with 300 ft2 of windows, with an average payback of 11 ± 3 years, not including any fuel price escalation or future decrease in low-e pricing. A cash flow or ROI analysis would show even more favorable results.

1. Derived from the ASHRAE 90.2 cost database for identical windows with low-e vs. clear glazing, with costs updated to 2011 basis. (See http://bc3.pnnl.gov, Economic Database in Support of ASHRAE 90.2, Research Project 1481 prepared by the NAHB Research Center.)

Similarly, data for 6 mm commercial glazing shows a range of $0-4 per ft2, which is generally consistent since commercial glazing will be higher than residential. Derived from (a) CASE report for Nonresidential & High-Rise Residential Fenestration Requirements, California Building Energy Efficiency Standards, Sep 2011, and (b) draft Commercial Building Envelope Cost Data Collection, prepared for Pacific Northwest National Laboratory by Faithful & Gould, Dec 2011.

In some cases, a 4th surface low-e and a #2 double silver low-e are less expensive than just a #2 triple silver low-e alone, meaning there is no incremental cost.

2. *ENERGY STAR Program Windows, Doors, and Skylights, Version 6.0 Draft 1 Criteria and Analysis Report*, D&R International for the U.S. Department of Energy, July 2012.

Cost Impact: This proposal will increase the cost of construction.

RE20-13

Public Hearing:	Committee:	AS	AM	D
	Assembly:	ASF	AMF	DF

R402.1.1T#1-EC-CULP

RE21 – 13

Table R402.1.1 and R401.2.3, (IRC Table N1102.1.1, and N1102.1.3)

Proponent: Thomas S Zaremba, Roetzel & Andress, representing Pikington North America and AGC Glass Company North America (tzaremba@ralaw.com)

Revise as follows:

TABLE R402.1.1 (N1102.1.1)
INSULATION AND FENESTRATION REQUIREMENTS BY COMPONENT[a]

CLIMATE ZONE	FENES-TRATION *U*-FACTOR[b]	SKYLIGHT[b] *U*-FACTOR	GLAZED FENES-TRATION SHGC[b,e]	CEILING *R*-VALUE	WOOD FRAME WALL *R*-VALUE	MASS WALL *R*-VALUE[i]	FLOOR *R*-VALUE	BASEMENT[c] WALL *R*-VALUE	SLAB[d] *R*-VALUE AND DEPTH	CRAWL SPACE[c] WALL *R*-VALUE
1	NR	0.75	0.25	30	13	3/4	13	0	0	0
2	0.40	0.65	0.25	38	13	4/6	13	0	0	0
3	0.35	0.55	0.25	38	20 or 13+5[h]	8/13	19	5/13[f]	0	5/13
4 except Marine	0.35	0.55	0.40	49	20 or 13+5[h]	8/13	19	10/13	10, 2 ft	10/13
5 and Marine 4	~~0.32~~ 0.25[i]	0.55	NR	49	20 or 13+5[h]	13/17	30[g]	15/19	10, 2 ft	15/19
6	~~0.32~~ 0.25[i]	0.55	NR	49	20+5 or 13+10[h]	15/20	30[g]	15/19	10, 4 ft	15/19
7 and 8	~~0.32~~ 0.25[i]	0.55	NR	49	20+5 or 13+10	15/20	38	15/19	10, 4 ft	15/19

For SI: 1 foot = 304.8 mm.

a. *R*-values are minimums. *U*-factors and SHGC are maximums. When insulation is installed in a cavity which is less than the label or design thickness of the insulation, the installed *R*-value of the insulation shall not be less than the *R*-value specified in the table.
b. The fenestration *U*-factor column excludes skylights. The SHGC column applies to all glazed fenestration. Exception: Skylights may be excluded from glazed fenestration SHGC requirements in Climate Zones 1 through 3 where the SHGC for such skylights does not exceed 0.30.
c. "15/19" means R-15 continuous insulation on the interior or exterior of the home or R-19 cavity insulation at the interior of the basement wall. "15/19" shall be permitted to be met with R-13 cavity insulation on the interior of the basement wall plus R-5 continuous insulation on the interior or exterior of the home. "10/13" means R-10 continuous insulation on the interior or exterior of the home or R-13 cavity insulation at the interior of the basement wall.
d. R-5 shall be added to the required slab edge *R*-values for heated slabs. Insulation depth shall be the depth of the footing or 2 feet, whichever is less in Climate Zones 1 through 3 for heated slabs.
e. There are no SHGC requirements in the Marine Zone.
f. Basement wall insulation is not required in warm-humid locations as defined by Figure R301.1 and Table R301.1.
g. Or insulation sufficient to fill the framing cavity, R-19 minimum.

h. First value is cavity insulation, second is continuous insulation or insulated siding, so "13+5" means R-13 cavity insulation plus R-5 continuous insulation or insulated siding. If structural sheathing covers 40 percent or less of the exterior, continuous insulation *R*-value shall be permitted to be reduced by no more than R-3 in the locations where structural sheathing is used – to maintain a consistent total sheathing thickness.

i. The second *R*-value applies when more than half the insulation is on the interior of the mass wall.

j. *Dynamic glazing* that is automatically controlled to modulate, in multiple steps, the amount of solar gain and light transmitted into the space shall be permitted to have a U-factor of 0.27.

TABLE R402.1.3 (N11002.1.3)

EQUIVALENT *U*-FACTORS[a]

CLIMATE ZONE	FENES-TRATION *U*-FACTOR	SKYLIGHT *U*-FACTOR	CEILING *U*-FACTOR	FRAME WALL *U*-FACTOR	MASS WALL *U*-FACTOR[b]	FLOOR *U*-FACTOR	BASEMENT WALL *U*-FACTOR	CRAWL SPACE WALL *U*-FACTOR
1	NR	0.75	0.035	0.082	0.197	0.064	0.360	0.477
2	0.40	0.65	0.030	0.082	0.165	0.064	0.360	0.477
3	0.35	0.55	0.030	0.057	0.098	0.047	0.091[c]	0.136
4 except Marine	0.35	0.55	0.030	0.057	0.098	0.047	0.059	0.065
5 and Marine 4	~~0.32~~ 0.25[d]	0.55	0.026	0.057	0.082	0.033	0.050	0.055
6	~~0.32~~ 0.25[d]	0.55	0.026	0.048	0.060	0.033	0.050	0.055
7 and 8	~~0.32~~ 0.25[d]	0.55	0.026	0.048	0.057	0.028	0.050	0.055

a. Nonfenestration *U*-factors shall be obtained from measurement, calculation or an approved source.

b. When more than half the insulation is on the interior, the mass wall *U*-factors shall be a maximum of 0.17 in Climate Zone 1, 0.14 in Climate Zone 2, 0.12 in Climate Zone 3, 0.087 in Climate Zone 4 except Marine, 0.065 in Climate Zone 5 and Marine 4, and 0.057 in Climate Zones 6 through 8.

c. Basement wall *U*-factor of 0.360 in warm-humid locations as defined by Figure R301.1 and Table R301.1.

d. *Dynamic glazing* that is automatically controlled to modulate, in multiple steps, the amount of solar gain and light transmitted into the space shall be permitted to have a U-factor of 0.27.

Reason: Achieving a 0.25 U-factor is technologically feasible using a double, not a triple, glazed unit. In fact, all five (5) of the primary glass manufacturers in the United States, offer a low-e coated glass made specifically for use on the #4 surface (or the surface found inside the home) of a double glazed unit. In the right frame, advent of #4 surface low-e products enable windows to achieve a 0.25 or lower U-factor using double glazed windows.

While total window costs vary widely based on specific product, manufacturer, and location, public cost data indicates a cost of between $0.25 to $2 per ft^2 to add an additional low-e coating to the #4 surface of a double glazed assembly. Given the significant energy savings that will be achieved by reducing U-factor from its current level of 0.32 to 0.25 in these climate zones, consumers can reasonably expect a payback between 8 and 14 years (not including fuel price escalation or future decreases in low-e pricing).

An exception for dynamic glazing is included in this proposal. Dynamic glazing is designed primarily to provide adjustable solar heat gain control. While it can achieve good U-factors, a 0.25 may be just beyond its current reach without forcing it into triple glazed assemblies. Since dynamic glazing is so integral to ultimately moving to "zero energy homes," its use should not be discouraged by a small U-factor differential in the prescriptive path.

Cost Impact: The code change proposal will increase the cost of construction.

RE21-13

Public Hearing:	Committee:	AS	AM	D
	Assembly:	ASF	AMF	DF

R402.1.1T#1-EC-ZAREMBA

RE22 – 13
Table R402.1.1 (IRC Table N1102.1.1)

Proponent: Dr. Thomas D. Culp, Birch Point Consulting LLC, representing the Glazing Industry Code Committee (culp@birchpointconsulting.com)

Revise as follows:

TABLE R402.1.1 (N1102.1.1)
INSULATION AND FENESTRATION REQUIREMENTS BY COMPONENT

CLIMATE ZONE	FENESTRATION *U*-FACTOR	SKYLIGHT *U*-FACTOR	GLAZED FENESTRATION SHGC[b,e]	CEILING *R*-VALUE	WOOD FRAME WALL *R*-VALUE	MASS WALL *R*-VALUE[i]	FLOOR *R*-VALUE	BASEMENT[c] WALL *R*-VALUE	SLAB[d] *R*-VALUE & DEPTH	CRAWL SPACE[c] WALL *R*-VALUE
1	NR	0.75	Max 0.25	30	13	3 / 4	13	0	0	0
2	0.40	0.65	Max 0.25	38	13	4 / 6	13	0	0	0
3	0.35	0.55	Max 0.25	38	20 or 13+5[h]	8/13	19	5/13[f]	0	5 / 13
4 except Marine	0.35	0.55	0.40	38	20 or 13+5[h]	8 / 13	19	10 / 13	10, 2 ft	10/13
5 and Marine 4	0.32	0.55	Min 0.25 ~~NR~~	49	20 or 13+5[h]	13 / 17	30[g]	15/19	10,2ft	15/19
6	0.32	0.55	Min 0.25 ~~NR~~	49	20+5 or 13+5[h]	15 / 20	30[g]	15/19	10,4ft	15/19
7 and 8	0.32	0.55	Min 0.25 ~~NR~~	49	20+5 or 13+10[h]	19 / 21	38[g]	15/19	10,4ft	15/19

For SI: 1 foot = 304.8 mm.

a. *R*-values are minimums. *U*-factors are maximums. ~~and~~ SHGC are maximums ("max") or minimums ("min") as noted. When insulation is installed in a cavity which is less than the label or design thickness of the insulation, the installed *R*-values of the insulation shall not be less than the *R*-value specified in the table.

(Portions of Table not shown remain unchanged)

Reason: The 2012 IECC made a significant change by lowering the maximum SHGC in zones 1-3 to 0.25. While this reduces energy use for cooling-dominated homes in the south, the combination of this low SHGC in the south with the "NR" no requirement in zones 5-8 creates a loophole that actually harms energy efficiency in the north.

Windows are generally distributed through national networks, and the "NR" allows the same ultra-low SHGC window designed for the south to also be used in the north. However, the performance of homes is simply not the same in Arizona and Vermont. A 0.25 SHGC window will permanently block 75% of the sun's energy from entering the home for the full life of the window. In Arizona, this is very beneficial for reducing cooling loads, but in Vermont, this significantly hinders the use of free solar energy to reduce heating loads that must otherwise be met using fossil fuels. If ultra low SHGC windows intended for the south are used in the north, it will increase annual energy consumption, rather than conserve it.

This is not just a hypothetical problem. An analysis conducted for EPA in support of the Energy Star Windows program determined that the mean and median SHGC of Energy Star double hung windows from the top 20 window manufacturers is only 0.22. [1] This is clear evidence that national window manufacturers are largely limiting their inventories to a single very low SHGC product that can meet code in all climate zones, regardless of the impact on energy efficiency for a specific location.

In its technical support for the Energy Star Windows program, Lawrence Berkeley National Laboratory (LBNL) has consistently determined that higher solar heat gain saves more energy in the north. In fact, in the latest analysis of August 2012, LBNL concluded that setting a minimum SHGC of 0.35 in the north would double the national aggregate energy savings resulting from the proposed new criteria. [2]

Nonetheless, this proposal seeks to be more moderate, and just establish a base level minimum SHGC to ensure that ultra-low SHGC windows are not inappropriately used in the north. Both EPA and Natural Resources Canada have established a minimum SHGC for the Energy Star Most Efficient designation.[3] A minimum 0.25 SHGC is parallel to the maximum 0.25 SHGC in the south, will ensure different glazing packages are used for the south and north, and includes low-e products available from all glass manufacturers with both high solar gain products for passive solar design and solar control products to mitigate summer peak loads.

This problem has increased as SHGC requirements in the south have decreased in both the IECC and Energy Star. The code must now address this problem and recognize that using the same low SHGC glazing in Phoenix and Boston makes no sense.

1. *Technical Support for ENERGY STAR Windows Version 6.0 Specification Revision*, Lawrence Berkeley National Laboratory and D&R International, July 1, 2012, p. 2.
2. EPA's ENERGY STAR for Windows, Doors and Skylights Draft 1 Criteria and Analysis Report Stakeholder's Meeting, *Energy Star Program Savings Estimates*, Lawrence Berkeley National Laboratory, August 27, 2012, slide 98.
3. http://www.energystar.gov/ia/partners/downloads/EPA_Memo_ENERGY_STAR_Most_Efficient_2013.pdf

Cost Impact: The code change proposal will not increase the cost of construction.

RE22-13

Public Hearing:	Committee:	AS	AM	D
	Assembly:	ASF	AMF	DF

R402.1.1T#2-EC-CULP

RE23 – 13
Table R402.1.1 (IRC Table N1102.1.1)

Proponent: Dr. Thomas D. Culp, Birch Point Consulting LLC, representing the Glazing Industry Code Committee (culp@birchpointconsulting.com)

Revise as follows:

TABLE R402.1.1 (N1102.1.1)
INSULATION AND FENESTRATION REQUIREMENTS BY COMPONENT[a]

CLIMATE ZONE	FENESTRATION *U*-FACTOR[b]	SKYLIGHT[b] *U*-FACTOR	GLAZED FENESTRATION SHGC[b,e]	CEILING *R*-VALUE	WOOD FRAME WALL *R*-VALUE	MASS WALL *R*-VALUE[i]	FLOOR *R*-VALUE	BASEMENT[c] WALL *R*-VALUE	SLAB[d] *R*-VALUE & DEPTH	CRAWL SPACE[c] WALL *R*-VALUE
1	NR	0.75[j]	0.25	30	13	3 / 4	13	0	0	0
2	0.40[j]	0.65[j]	0.25	38	13	4 / 6	13	0	0	0
3	0.35[j]	0.55[j]	0.25	38	20 or 13+5[h]	8/13	19	5/13[f]	0	5 / 13
4 except Marine	0.35	0.55	0.40	38	20 or 13+5[h]	8 / 13	19	10 / 13	10, 2 ft	10/13
5 and Marine 4	0.32	0.55	NR	49	20 or 13+5[h]	13 / 17	30[g]	15/19	10,2ft	15/19
6	0.32	0.55	NR	49	20+5 or 13+5[h]	15 / 20	30[g]	15/19	10,4ft	15/19
7 and 8	0.32	0.55	NR	49	20+5 or 13+10[h]	19 / 21	38[g]	15/19	10,4ft	15/19

(*Portions of Table not shown remain unchanged.)*

j. In wind-borne debris regions in Climate Zones 2 through 3, impact rated fenestration complying with Section R301.2.1.2 of the *International Residential Code* or Section 1609.1.2 of the *International Building Code* shall have a maximum *U*-factor of 1.20 and maximum *SHGC* of 0.30.

Reason: The purpose of this proposal is to account for the unique situation of hurricane impact-resistant fenestration in wind-borne debris regions. The current U-factor requirements in zones 2-3 require double glazing, which is entirely appropriate for most situations. However, hurricane events pose a unique circumstance with both significant safety and cost issues. In double glazed impact-resistant windows, only one lite is laminated. (Laminating both lites is much less common because it significantly affects cost, weight, and operability of the window.) As a result, one lite is not laminated, and presents a safety issue by potentially creating flying glass debris during a hurricane event. If the unlaminated lite is located to the exterior, this adds to the debris and safety hazard during clean-up. And even worse, if the unlaminated lite is located to the interior, the flying glass debris also poses a potential risk to life safety for occupants inside the home or apartment.

Furthermore, the higher cost of double glazed impact-resistant fenestration (commonly $200-300 per window higher than non-impact windows) already creates a cost incentive to use the exceptions in Section R301.2.1.2 of the IRC and Section 1609.1.2 of the IBC that allow 1/2" wood structural panels to be provided to the homeowner to install over the windows when a hurricane approaches. This is not desirable in that the use of wood structural panels is highly unreliable – what if the panels cannot be easily located, the panels have been disposed, the homeowner has difficulty installing the panels on the 2nd floor, or if the homeowner is out of town? In this case, the home is left with no protection, increasing the potential life safety risk and property damage.

For these safety and cost reasons, it is prudent to allow monolithic laminated products for the very limited circumstances of coastal wind-borne debris regions in warm climates (zones 1-3). This is accomplished through a footnote to allow a U-factor of 1.2 for this limited area, and also a 0.30 SHGC because it is difficult to achieve 0.25 SHGC in monolithic applications without using darker glass. For a typical 2000 ft2 home, the energy impact is approximately $50-150 per year, which is reasonable given the unique life safety issue and the limited region.

Some might contend that the UA trade-off or performance path can be used to allow monolithic impact-resistant products to be used in these areas without the addition of a new footnote. However, many homes use the prescriptive path, the UA trade-off does not help with SHGC, and *none* of these trade-offs are available for replacement windows.
The standards for energy efficiency must be viewed together with life safety requirements and practical application. We believe this proposal provides a good balance for these warmer wind-borne debris regions – maintaining a high level of safety protection while also providing good performance solar control.

Cost Impact: This proposal will lower the cost of construction.

RE23-13

Public Hearing:	Committee:	AS	AM	D
	Assembly:	ASF	AMF	DF

R402.1.1T#3-EC-CULP

RE24 – 13
Table R402.1.1 (IRC Table N1102.1.1)

Proponent: Don Surrena, CBO, National Association of Home Builders (NAHB) (dsurrena@nahb.org)

Revise as follows:

TABLE R402.1.1 (N1102.1.1)
INSULATION AND FENESTRATION REQUIREMENTS BY COMPONENT[a]

CLIMATE ZONE	FENESTRATION *U*-FACTOR[b]	SKYLIGHT[b] *U*-FACTOR	GLAZED FENESTRATION SHGC[b,e]	CEILING *R*-VALUE	WOOD FRAME WALL *R*-VALUE	MASS WALL *R*-VALUE[i]	FLOOR *R*-VALUE	BASEMENT[c] WALL *R*-VALUE	SLAB[d] *R*-VALUE & DEPTH	CRAWL SPACE[c] WALL *R*-VALUE
1	NR	0.75	0.25	30	13	3 / 4	13	0	0	0
2	0.40	0.65	0.25	38	13	4 / 6	13	0	0	0
3	0.35	0.55	0.25	38	20 or 13+5[h]	8/13	19	5/13[f]	0	5 / 13
4 except Marine	0.35	0.55	~~0.40~~ NR	38	20 or 13+5[h]	8 / 13	19	10 / 13	10, 2 ft	10/13
5 and Marine 4	0.32	0.55	NR	49	20 or 13+5[h]	13 / 17	30[g]	15/19	10,2ft	15/19
6	0.32	0.55	NR	49	20+5 or 13+5[h]	15 / 20	30[g]	15/19	10,4ft	15/19
7 and 8	0.32	0.55	NR	49	20+5 or 13+10[h]	19 / 21	38[g]	15/19	10,4ft	15/19

(Portions of Table not shown remain unchanged)

Reason: The addition of a prescriptive restriction for the SHGC of 0.40 was added in the 2012 IECC. This is not a requirement that saves energy. In Climate Zone 4, heating degree days outnumber cooling degree days by about 2 to 3 times. Therefore for most of the year, the "sun is your friend" and solar heat gain is beneficial and reduces heating loads. There are some exceptions to this, but the majority of homes will not benefit from this restriction. The values being modified by this proposal are the same as what was proposed by the Department of Energy in their proposal EC13 from the last cycle. The values currently adopted were an increase from proposals not submitted by the Department of Energy.

Energy modeling below shows some examples of the additional energy required when this artificial restriction is placed on windows in Climate Zone 4.

Cost Impact: The code change proposal will not increase the cost of construction.

RE24-13

Public Hearing:	Committee:	AS	AM	D
	Assembly:	ASF	AMF	DF

R402.1.1T#2-EC-SURRENA

RE25 – 13
Table R402.1.1 (IRC Table N1102.1.1)

Proponent: Craig Conner, Building Quality, representing self (craig.conner@mac.com)

Revise as follows:

TABLE R402.1.1 (N1102.1.1)
INSULATION AND FENESTRATION REQUIREMENTS BY COMPONENT[a]

CLIMATE ZONE	FENESTRATION *U*-FACTOR[b]	SKYLIGHT[b] *U*-FACTOR	GLAZED FENESTRATION SHGC[b,e]	CEILING *R*-VALUE	WOOD FRAME WALL *R*-VALUE	MASS WALL *R*-VALUE[i]	FLOOR *R*-VALUE	BASEMENT[c] WALL *R*-VALUE	SLAB[d] *R*-VALUE & DEPTH	CRAWL SPACE[c] WALL *R*-VALUE
1	NR	0.75	~~0.25~~ 0.30	30	13	3 / 4	13	0	0	0
2	0.40	0.65	~~0.25~~ 0.30	38	13	4 / 6	13	0	0	0
3	0.35	0.55	~~0.25~~ 0.30	38	20 or 13+5[h]	8/13	19	5/13[f]	0	5 / 13
4 except Marine	0.35	0.55	~~0.40~~ NR	38	20 or 13+5[h]	8 / 13	19	10 / 13	10, 2 ft	10/13
5 and Marine 4	0.32	0.55	NR	49	20 or 13+5[h]	13 / 17	30[g]	15/19	10,2ft	15/19
6	0.32	0.55	NR	49	20+5 or 13+5[h]	15 / 20	30[g]	15/19	10,4ft	15/19
7 and 8	0.32	0.55	NR	49	20+5 or 13+10[h]	19 / 21	38[g]	15/19	10,4ft	15/19

For SI: 1 foot = 304.8 mm.

(Portions of Table not shown remain unchanged)

Reason: Windows exist mainly to give a view and bring in light. It makes sense to limit the heat (SHGC) in southern climates when doing so does not limit the other goals. Windows at an SHGCs of 0.25 and lower have to limit the visible light. Limiting the SHGC to 0.25 places too much of a limit on the visible light.

Perhaps future residential skylights and windows can provide day lighting, perhaps including automated day lighting in the future. Day lighting can be valuable in terms of limits cooling loads. Limiting SHGC down to 0.25 will tend to keep some of the best day lighting windows / skylights off the market.

Cost Impact: The code change proposal will not increase the cost of construction.

RE25-13

Public Hearing:	Committee:	AS	AM	D
	Assembly:	ASF	AMF	DF

R402.1.1T#1-EC-CONNER

RE26– 13

Table R402.1.1 (IRC Table N1102.1.1), Table R402.1.3, (IRC Table N1102.1.3)

Proponent: Shirley Ellis, Energy Systems Laboratory, Texas A&M Engineering Experiment Station, Texas A&M University System (shirleyellis@tamu.edu); Brenda A. Thompson, Clark County Building Department, Las Vegas NV, representing the ICC Sustainability, Energy & High Performance Code Action Committee (SEHPCAC) (bat@clarkcounty.gov); Mark Halverson, APA-The Engineered Wood Association & Loren Ross, The American Wood Council.

Revise as follows:

TABLE R402.1.1 (N1102.1.1)
INSULATION AND FENESTRATION REQUIREMENTS BY COMPONENT[a]

CLIMATE ZONE	FENESTRATION *U*-FACTOR[b]	SKYLIGHT[b] *U*-FACTOR	GLAZED FENESTRATION SHGC[b,e]	CEILING *R*-VALUE	WOOD FRAME WALL *R*-VALUE	MASS WALL *R*-VALUE[i]	FLOOR *R*-VALUE	BASEMENT[c] WALL *R*-VALUE	SLAB[d] *R*-VALUE & DEPTH	CRAWL SPACE[c] WALL *R*-VALUE
1	NR	0.75	0.25	30	13	3 / 4	13	0	0	0
2	0.40	0.65	0.25	38	13	4 / 6	13	0	0	0
3	0.35	0.55	0.25	38	~~20 or 13+5[h]~~ 13	8 / 13	19	5/13[f]	0	5 / 13
4 except Marine	0.35	0.55	0.40	49	20 or 13+5[h]	8 / 13	19	10 / 13	10, 2 ft	10/13
5 and Marine 4	0.32	0.55	NR	49	20 or 13+5[h]	13 / 17	30[g]	15/19	10,2ft	15/19
6	0.32	0.55	NR	49	20+5 or 13+10[h]	15 / 20	30[g]	15/19	10,4ft	15/19
7 and 8	0.32	0.55	NR	49	20+5 or 13+10[h]	19 / 21	38[g]	15/19	10,4ft	15/19

(Portions of Table not shown remain unchanged)

TABLE R402.1.3 (N1102.1.3)
EQUIVALENT *U*-FACTORS[a]

CLIMATE ZONE	FENESTRATION *U*-FACTOR	SKYLIGHT *U*-FACTOR	CEILING *U*-FACTOR	FRAME WALL *U*-FACTOR	MASS WALL *U*-FACTOR[b]	FLOOR *U*-FACTOR	BASEMENT WALL *U*-FACTOR	CRAWL SPACE WALL *U*-

								FACTOR
1	NR	0.75	0.035	0.082	0.197	0.064	0.360	0.477
2	0.40	0.65	0.030	0.082	0.165	0.064	0.360	0.477
3	0.35	0.55	0.030	~~0.057~~ 0.082	0.098	0.047	0.091[c]	0.136
4 except Marine	0.35	0.55	0.026	0.057	0.098	0.047	0.059	0.065
5 and Marine 4	0.32	0.55	0.026	0.057	0.082	0.033	0.050	0.055
6	0.32	0.55	0.026	0.048	0.060	0.033	0.050	0.055
7 and 8	0.32	0.55	0.026	0.048	0.057	0.028	0.050	0.055

Reason.
Ellis: We support the Department of Energy's code change proposal (EC13) for the 2012 IECC that held the wood frame wall R-value at R-13 in Table R402.1.1. The increase in R-values in Climate Zone 3 in wood frame walls is just not cost effective and shown to have a payback period of over 35 years. When analyzing the construction cost vs. energy savings, the simple payback can potentially be longer than the expected life of the home. This payback will be unacceptable to most homebuyers.

There are other areas within buildings where energy conservation can be increased such as energy efficient equipment or higher quality windows which can be provide a payback that will be more acceptable to most homebuyers.

Thompson: This public comment is submitted by the ICC Sustainability Energy and High Performance Code Action Committee

SEHPCAC: The SEHPCAC was established by the ICC Board of Directors to pursue opportunities to improve and enhance assigned International Codes or portion thereof. This includes both the technical aspects of the codes as well as the code content in terms of scope and application of referenced standards. Since its inception in July, 2011, the SEHPCAC has held 2 open meetings and over 15 workgroup calls which included members of the SEHPCAC as well as any interested party to discuss and debate proposed changes and public comments. Related documentation and reports are posted on the SEHPCAC website at: http://www.iccsafe.org/cs/SEHPCAC/Pages/default.aspx.

DOE did not propose changing the value for **Climate Zone 3** in EC13 for the 2012 cycle. This is completely compatible with the DOE proposal which is attached on the following pages.

The cavity only entries proposed for **Climate Zone 6, 7, and 8** are reflective of the cavity only changes proposed for the Commercial chapter for RESIDENTIAL.

Please note that the SEHPCAC has also submitted other proposals that are coordinated with this proposal and are intended to clarify and improve the usability of the code's prescriptive building thermal envelope provisions. This proposal, however, is intended to stand alone and is not contingent upon the success of other SEHPCAC proposals.

Halverson-Ross: We support the U.S. Department of Energy's position for Climate Zone 3, as stated in EC13-09/10 that held the wood frame wall *R*-value at R13 in Table R402.1.1. The increase in *R*-values for Climate Zone 3 wood frame walls is not cost effective and is shown to have a payback period of over 35 years. When analyzing the construction cost vs. energy savings, the simple payback can potentially be longer than the expected life of the home.

The National Association of Home Builders Research Center estimated the cost to builders to increase the wood framed wall *R*-value from R13 to R20 to be $1.33 per square foot of wall or approximately $3,433 per house. The total increase in cost for the builder to meet the 2012 IECC requirements compared to meeting the 2009 IECC requirements was estimated to be $7,203. So the cost of increasing just the insulation in the walls was nearly 50% of the total cost of meeting all of the provisions of the 2012 IECC in Climate Zone 3 while the energy savings of the increased wall insulation was only estimated to contribute 10% of the total energy savings.

This payback will be unacceptable to nearly all consumers. With energy savings only running between $2 and $5.50 per month in Climate Zone 3, we urge the code body to approve this proposal with the modification made in this Public Comment.

We ask the support of the committee for this proposal.

Cost Impact:
ELLIS: None.
THOMPSON: This code change will decrease the cost of construction.
HALVERSON-ROSS: This code change proposal will not increase the cost of construction.

RE26-13

Public Hearing:	Committee:	AS	AM	D
	Assembly:	ASF	AMF	DF

R402.1.1T-EC-ELLIS

RE27 – 13

R202 (NEW) (IRC N1101.9 (NEW)), Table R402.1.1, (IRC Table N1102.1.1), Chapter 5 (IRC Chapter 44)

Proponent: Wesley Hall, Reflectix, Inc., representing self (wes.hall@reflectixinc.com**),** Vickie Lovell, InterCode Incorporated, representing the Reflective Insulation Manufacturers Association International (vickie@intercodeinc.com)

Revise as follows:

TABLE R402.1.1 (N1102.1.1)
INSULATION AND FENESTRATION REQUIREMENTS BY COMPONENT[a]

CLIMATE ZONE	FENESTRATION *U*-FACTOR[b]	SKYLIGHT[b] *U*-FACTOR	GLAZED FENESTRATION SHGC[b,e]	CEILING *R*-VALUE	WOOD FRAME WALL *R*-VALUE	MASS WALL *R*-VALUE[i]	FLOOR *R*-VALUE	BASEMENT[c] WALL *R*-VALUE	SLAB[d] *R*-VALUE & DEPTH	CRAWL SPACE[c] WALL *R*-VALUE
1	NR	0.75	0.25	30[l]	13	3 / 4	13	0	0	0
2	0.40	0.65	0.25	38j	13	4 / 6	13	0	0	0
3	0.35	0.55	0.25	38j	20 or 13+5[h]	8 / 13	19	5/13[f]	0	5 / 13
4 except Marine	0.35	0.55	0.40	49	20 or 13+5[h]	8 / 13	19	10 / 13	10, 2 ft	10/13
5 and Marine 4	0.32	0.55	NR	49	20 or 13+5[h]	13 / 17	30[g]	15/19	10,2ft	15/19
6	0.32	0.55	NR	49	20+5 or 13+10[h]	15 / 20	30[g]	15/19	10,4ft	15/19
7 and 8	0.32	0.55	NR	49	20+5 or 13+10[h]	19 / 21	38[g]	15/19	10,4ft	15/19

(Portions of Table not shown remain unchanged)

j. Radiant barriers in vented attics shall comply with the requirements of ASTM C1313 and shall be installed in accordance with ASTM C1743.

Add a new definition as follows:

RADIANT BARRIER. A material having a low emittance surface of 0.1 or less installed in building assemblies.

Add new standards to Chapter 5 as follows:

ASTM

C1313/C1313M-12 Standard Specification for Sheet Radiant Barriers for Building Construction Applications

C1743-12 Standard Practice for Installation and Use of Radiant Barrier Systems (RBS) in Residential Building Construction

Reason: (HALL) The purpose of this proposal is to provide information and references for radiant barriers.

The content of this proposal contains product requirements and references that will aid the contractors and code officials in recognizing and understanding radiant barrier products and correct installation procedures.

Attic radiant barriers are extensively used across Climate Zones 1, 2 and 3, i.e. in the sunbelt areas. These products have been on the market for over 24 years and are used by 87 of the top 100 US Builders. They have an established history and have been accepted into several regional code requirements and are included in the Energy Star Homes Guidelines. Some 650 million square feet of the product is being installed annually.

The current state and city codes that include radiant barrier are:

- HI – Chapter 181 of Title 3, Table 402.1.1.1, Section 402.1.1.6, 402.1.1.8.1
- TX - Austin, Chapter 25-12, Article 12. Energy Code, Section 402.6
- FL – 2010 Florida Building Code, Section 405.6.1, Figure 405.6.1 & Table 303.2 (ASTM Standards)
- CA – Title 24, Part 6, Subsection 8, Section (f), Subsection 2; Table 151-B; Table 151-C; Table 151-D

This product has two ASTM Standards that are applicable – ASTM C1313, "Standard Specification for Sheet Radiant Barriers for Building Construction Applications," and ASTM C1743, "Standard Practice for Installation and Use of Radiant Barrier Systems (RBS) in Residential Building Construction". This proposal does not require the use of radiant barriers but requires that, when they are used, they comply with the two ASTM standards just referenced.

ASTM C1743-12 can be viewed at: http://reflectixinc.com/literature/securedpdfs/C1743.pdf.

(LOVELL) The use of radiant barriers in vented attics in hot climates has been shown to conserve substantial amounts of energy by reducing the temperatures in the attic. If the attic temperature is lower, that slows the rate of temperature differential and transfers heat away from ceiling envelope elements and HVAC equipment and ducting. Attic radiant barriers are extensively used across Climate Zones 1, 2 and 3, i.e. in the sunbelt areas, and numerous demonstration projects and studies have confirmed the energy savings and cost-effectiveness of these installations. Such radiant barrier products have been on the market for over 24 years and are used by 87 of the top 100 US Builders. They have an established history and have been accepted into several regional code requirements and are included in the Energy Star Homes Guidelines. Some 650 million square feet of the product is installed annually.

The current state and city codes that include radiant barrier are:

- HI – Chapter 181 of Title 3, Table 402.1.1.1, Section 402.1.1.6, 402.1.1.8.1
- TX - Austin, Chapter 25-12, Article 12. Energy Code, Section 402.6
- FL – 2010 Florida Building Code, Section 405.6.1, Figure 405.6.1 & Table 303.2 (ASTM Standards)
- CA – Title 24, Part 6, Subsection 8, Section (f), Subsection 2; Table 151-B; Table 151-C; Table 151-D

This product has two ASTM Standards that are applicable – ASTM C1313, "Standard Specification for Sheet Radiant Barriers for Building Construction Applications," and ASTM C1743, "Standard Practice for Installation and Use of Radiant Barrier Systems (RBS) in Residential Building Construction". This proposal requires the use of radiant barriers in a manner consistent with the existing language in the Energy Star for Homes – "Version 3, Exhibit 1" and, additionally, requires that the radiant barriers comply with the two ASTM standards just referenced.

The Department of Energy (DOE) has published the "Radiant Barrier Fact Sheet"[1] that is available on the DOE website through the following link: http://www.ornl.gov/sci/ees/etsd/btric/RadiantBarrier/RBFactSheet2010.pdf

Values taken from this DOE document are utilized in the "Savings Benefit to the Home Owner" section below.

A very comprehensive study was performed by Mario Medina. "This paper provides a general description of RBs, including installation configurations, the physical principles that make them work, and the laboratory and field experiments used to evaluate their thermal performance. An extensive review of the literature is summarized, highlighting fundamental issues, such as reduced ceiling heat flows, reduced space cooling and heating loads, and changes in attic temperatures produced by the installation of RBs in residential attics."[2] The document has been mentioned here as an additional reference related to radiant barrier product information and to highlight the scope of "benefit" studies that have been completed.

[1] Department of Energy "Radiant Barrier Fact Sheet" prepared by the Oak Ridge National Laboratory (2012).

[2] Medina, Mario, "A Comprehensive Review of Radiant Barrier Research Including Laboratory and Field Experiments", report prepared for the Reflective Insulation Manufacturers Association.

The study entitled "Radiant Barrier Impact on Selected Building Performance Measurements Model Home Case Study"[3], authored by B.E. Davis and J. Tiller, from the Appalachian State University Energy Center, sponsored by Centex Homes in Charlotte, NC, and demonstrates the energy savings associated with the use of radiant barriers in attics. In the study, two identical homes were fit with over sixty sensors, where one house contained a radiant barrier (designated as the "Belmont" home) and one did not. The house with the radiant barrier had a peak attic temperature drop by 23% and the improved efficiency of the cool air delivered through the ducts was 57%.
The current language in the Energy Star for Homes – "Version 3, Exhibit 1" requires the use of radiant barriers in vented attics, with an exception for attics containing no HVAC space conditioning equipment and a maximum of 10 linear feet of supply or return ducting.
Cost Calculator – to home owner – new structure – hip roof:

- Product Cost - Radiant Barrier OSB Panel – $0.11 per sq. ft.-(takes into account waste) [4]
- 2,000 sq. ft. house, ranch, hip roof
- 2,200 sq. ft. of roof area x $0.11 per sq. ft. (radiant barrier cost) = $242.00
- Cost to home owner - $242.00
- Additional cost added to monthly payment of a 30 year mortgage – 4% fixed interest rate:
- $242.00 @ 4% = addition of $1.16 to the monthly payment

Savings Benefit to the Home Owner:

- Cost to add Radiant Barrier OSB - $1.16 per month (per above)
- 2,000 sq. ft. house, ranch, hip roof
- Savings as calculated in the Department of Energy "Radiant Barrier Fact Sheet"
- Code level insulation with well-sealed ducts in the attic
- Zone 1 - $0.03 per sq. ft. x 2,000 sq. ft. = $60.00 / 12 months = $5.00 per month
- Zone 2 - $0.03 per sq. ft. x 2,000 sq. ft. = $60.00 / 12 months = $5.00 per month
- Zone 3 - $0.02 per sq. ft. x 2,000 sq. ft. = $40.00 / 12 months = $3.33 per month
- The cost for energy is based on first year (2012) values – if increases in energy cost due to inflation and other factors occur – annual savings will increase proportionally.

In summary, this exercise exemplifies the immediate energy cost savings that are netted when a radiant barrier is included in the design of a new home in Climate Zones 1, 2 and 3 with "well-sealed" ducts in the attic. The cost to the new home is small and the energy savings are significant over the life of the home.

References:

Davis, Bruce Eugene & Tiller, Jeffrey, "Radiant Barrier Impact on Selected Building Performance Measurements, Model Home Case Study", Appalachian State University Energy Center, USA, 2009.
Medina, M. A., "A Comprehensive Review of Radiant Barrier Research Including Laboratory and Field Experiments." Paper CH-12-C051, ASHRAE Transactions, Vol. 118, Part 1, 2012.
ASTM C1743-12 can be viewed at: http://reflectixinc.com/literature/securedpdfs/C1743.pdf.

Cost Impact: This proposal will not increase the cost of construction.

RE27-13

Public Hearing:	Committee:	AS	AM	D
	Assembly:	ASF	AMF	DF

R402.1.1T-EC-HALL

[3] Davis, Bruce Eugene & Tiller, Jeffrey, "Radiant Barrier Impact on Selected Building Performance Measurements, Model Home Case Study, Centex Homes,"

RE28 – 13

Table R402.1.1 (IRC Table 1102.1.1), Table R402.1.3 (IRC Table N1102.1.3)

Proponent: Don Surrena, CBO, National Association of Home Builders (NAHB) (dsurrena@nahb.org)

Revise as follows:

TABLE R402.1.1 (N1102.1.1)
INSULATION AND FENESTRATION REQUIREMENTS BY COMPONENT[a]

CLIMATE ZONE	FENESTRATION *U*-FACTOR[b]	SKYLIGHT[b] *U*-FACTOR	GLAZED FENESTRATION SHGC[b,e]	CEILING *R*-VALUE	WOOD FRAME WALL *R*-VALUE	MASS WALL *R*-VALUE[i]	FLOOR *R*-VALUE	BASEMENT[c] WALL *R*-VALUE	SLAB[d] *R*-VALUE & DEPTH	CRAWL SPACE[c] WALL *R*-VALUE
1	NR	0.75	0.25	30	13	3 / 4	13	0	0	0
2	0.40	0.65	0.25	~~38~~ 30	13	4 / 6	13	0	0	0
3	0.35	0.55	0.25	~~38~~ 30	20 or 13+5[h]	8 / 13	19	5/13[f]	0	5 / 13
4 except Marine	0.35	0.55	0.40	~~49~~ 38	20 or 13+5[h]	8 / 13	19	10 / 13	10, 2 ft	10/13
5 and Marine 4	0.32	0.55	NR	~~49~~ 38	20 or 13+5[h]	13 / 17	30[g]	15/19	10,2ft	15/19
6	0.32	0.55	NR	49	20+5 or 13+10[h]	15 / 20	30[g]	15/19	10,4ft	15/19
7 and 8	0.32	0.55	NR	49	20+5 or 13+10[h]	19 / 21	38[g]	15/19	10,4ft	15/19

(Portions of Table not shown remain unchanged)

TABLE 402.1.3 (N1102.1.3)
EQUIVALENT *U*-FACTORS[a]

CLIMATE ZONE	FENESTRATION *U*-FACTOR	SKYLIGHT *U*-FACTOR	CEILING *U*-FACTOR	FRAME WALL *U*-FACTOR	MASS WALL *U*-FACTOR[b]	FLOOR *U*-FACTOR	BASEMENT WALL *U*-FACTOR	CRAWL SPACE WALL *U*-FACTOR
1	NR	0.75	0.035	0.082	0.197	0.064	0.360	0.477
2	0.40	0.65	~~0.030~~ 0.035	0.082	0.165	0.064	0.360	0.477
3	0.35	0.55	~~0.030~~ 0.035	0.057	0.098	0.047	0.091[c]	0.136
4 except Marine	0.35	0.55	~~0.026~~ 0.030	0.057	0.098	0.047	0.059	0.065
5 and Marine 4	0.32	0.55	~~0.026~~ 0.030	0.057	0.082	0.033	0.050	0.055
6	0.32	0.55	0.026	0.048	0.060	0.033	0.050	0.055
7 and 8	0.32	0.55	0.026	0.048	0.057	0.028	0.050	0.055

(Portions of Table not shown remain unchanged)

Reason: There were four changes in the Ceiling R-value requirements in the 2012 IECC Edition, none of which should have been considered cost-effective. An energy and cost analysis was performed to show that the simple paybacks are in the 80-130 year range.

Climate Zone	Representative City	Change	Energy Savings	Incremental Cost	Simple Payback
2	Orlando, FL	R-38->R-30	$10/yr	$1,305	130 years
3	Atlanta, GA	R-38->R-30	$16/yr	$1,305	82 years
4	Richmond, VA	R-49->R-38	$15/yr	$1,379	92 years
5	Indianapolis, IN	R-49->R-38	$15/yr	$1,379	92 years

The energy modeling was done using the Energy Plus simulation engine and BEopt version 1.4, Cost figures came from ASHRAE RP-1481. Vaulted or cathedralized ceiling are very problematic when trying to achieve R-49 which is about 16 inches thick. This would require a rafter at least 17" tall (which does not exist) or an insulated panel, which represents a very small portion of the market.

Cost Impact: The code change proposal will not increase the cost of construction.

RE28-13

Public Hearing:	Committee:	AS	AM	D
	Assembly:	ASF	AMF	DF

R402.1.1T#6-EC-SURRENA

RE29 – 13

Table R402.1.1, (IRC Table N1102.1.1), R402.2 (IRC N1102.2), R402.2.13 (NEW) (IRC N1102.2.13 (NEW))

Proponent: Jay Crandell, P.E., ARES Consulting, representing Foam Sheathing Committee / American Chemistry Council (Jcrandell@aresconsulting.biz)

Revise as follows:

TABLE R402.1.1 (N1102.1.1)
INSULATION AND FENESTRATION REQUIREMENTS BY

(Portions of Table not shown remain unchanged)

h. First value is cavity insulation, second is continuous insulation or insulated siding, so "13 + 5" means R-13 cavity insulation plus R-5 continuous insulation or insulated siding. See Section 402.2.13 for cases where thickness of continuous insulation is varied to maintain a consistent overall sheathing thickness on walls intermittently braced with structural sheathing panels. ~~If structural sheathing covers 40 percent or less of the exterior, continuous insulation *R*-value shall be permitted to be reduced by no more than R-3 in the locations where structural sheathing is used – to maintain a consistent total sheathing thickness.~~

R402.2 (N1102.2) Specific insulation requirements (Prescriptive). In addition to the requirements of Section R402.1, insulation shall meet the specific requirements of Sections R402.2.1 through ~~R402.2.12~~. R402.2.13

R402.2.13 (N1102.2.13) Continuous insulation on walls with intermittent structural sheathing. Where an exterior wall is intermittently braced with structural sheathing, the R-value of continuous insulation required by Table R402.1.1 shall be permitted to be reduced in the locations where structural sheathing is used in order to maintain a consistent total sheathing thickness when:

1. The overall U-factor of the opaque assembly, including areas with and without structural sheathing, is equal to or less than the required U-factor in Table R402.1.3 and
2. The assembly is in compliance with the vapor retarder requirements of Section R702.7 of the *International Residential Code* or Section 1405.3 of the *International Building Code* as applicable.

Reason: This proposal corrects a discrepancy where frame wall assemblies using component insulation R-values allowed under existing footnote (h) are not currently equivalent to U-factors in Table R402.1.3.

Cost Impact: The code change proposal may increase the cost of construction.

Note: If this change is approved, the proposed Item 2 to Section N1102.2.13 would be shown in Chapter 11 of the IRC without the reference to the IBC as follows:

2. The assembly is in compliance with the vapor retarder requirements of Section R702.7.

RE29-13

Public Hearing:	Committee:	AS	AM	D
	Assembly:	ASF	AMF	DF

R402.1.1T-EC-CRANDELL

RE30 – 13
Table R402.1.1, (IRC Table N1102.1.1)

Proponent: Matt Dobson, Representing Vinyl Siding Institute

Revise as follows:

TABLE R402.1.1 (N1102.1.1)
INSULATION AND FENESTRATION REQUIREMENTS BY COMPONENT[a]

h.First value is cavity insulation, second is continuous insulation, ~~or~~ insulated siding or combination of the two, so "13 + 5" means R-13 cavity insulation plus R-5 continuous insulation, ~~or~~ insulated siding or combination of the two. If structural sheathing covers 40 percent or less of the exterior, continuous insulation *R*-value shall be permitted to be reduced by no more than R-3 in the locations where structural sheathing is used – to maintain a consistent total sheathing thickness.

(Portions of Table not shown remain unchanged)

Reason: This change is necessary because the current footnote only allows either insulated siding or insulated sheathing (continuous insulation), but the two product categories can be used together to achieve code compliance. This is a simple fix that was lost in the shuffle of the 2012 Final Action Hearings. For more information on insulated siding, go to www.insulatedsiding.info.

Cost Impact: This change will have no cost impact.

RE30-13

Public Hearing:	Committee:	AS	AM	D
	Assembly:	ASF	AMF	DF

R402.1.1T-EC-DOBSON

RE31 – 13

Table R402.1.1 (IRC N1102.1.1), Table R402.1.3 (IRC Table N1102.1.3)

Proponent: Craig Conner, Building Quality, representing self (craig.conner@mac.com)

Revise as follows:

TABLE R402.1.1 (N1102.1.1)
INSULATION AND FENESTRATION REQUIREMENTS BY COMPONENT

CLIMATE ZONE	FENESTRATION *U*-FACTOR[b]	SKYLIGHT[b] *U*-FACTOR	GLAZED FENESTRATION SHGC[b,e]	CEILING *R*-VALUE	WOOD FRAME WALL *R*-VALUE	MASS WALL *R*-VALUE[i]	FLOOR *R*-VALUE	BASEMENT[c] WALL *R*-VALUE	SLAB[d] *R*-VALUE & DEPTH	CRAWL SPACE[c] WALL *R*-VALUE
1	NR	0.75	0.25	30	13	3 / 4	13	0	0	0
2	0.40	0.65	0.25	~~38~~30	13	4 / 6	13	0	0	0
3	0.35	0.55	0.25	38	~~20 or 13+5~~[h] 13	8/13	19	5/13[f]	0	5 / 13
4 except Marine	0.35	0.55	0.40	38	20 or 13+5[h]	8 / 13	19	10 / 13	10, 2 ft	10/13
5 and Marine 4	0.32	0.55	NR	~~49~~38	20 or 13+5[h]	13 / 17	30[g]	~~15/19~~ 10/13	10,2ft	~~15/19~~ 10/13
6	0.32	0.55	NR	49	20+5 or 13+5[h]	15 / 20	30[g]	15/19	10,4ft	~~15/19~~ 10/13
7 and 8	0.32	0.55	NR	49	20+5 or 13+10[h]	19 / 21	38[g]	15/19	10,4ft	~~15/19~~ 10/13

For SI: 1 foot = 304.8 mm.

(*Portions of Table not shown remain unchanged)*

TABLE 402.1.3 (N1102.1.3)
EQUIVALENT *U*-FACTORS[a]

CLIMATE ZONE	FENESTRATION *U*-FACTOR	SKYLIGHT *U*-FACTOR	CEILING *U*-FACTOR	FRAME WALL *U*-FACTOR	MASS WALL *U*-FACTOR[b]	FLOOR *U*-FACTOR	BASEMENT WALL *U*-FACTOR	CRAWL SPACE WALL *U*-FACTOR
1	NR	0.75	0.035	0.082	0.197	0.064	0.360	0.477
2	0.40	0.65	~~0.030~~ 0.035	0.082	0.165	0.064	0.360	0.477
3	0.35	0.55	0.030	~~0.057~~ 0.082	0.098	0.047	0.091[c]	0.136
4 except Marine	0.35	0.55	0.030	0.057	0.098	0.047	0.059	0.065
5 and Marine 4	0.32	0.55	~~0.026~~ 0.030	0.057	0.082	0.033	~~0.050~~ 0.059	~~0.055~~ 0.065

6	0.32	0.55	0.026	0.048	0.060	0.033	0.050	~~0.055~~ 0.065
7 and 8	0.32	0.55	0.026	0.048	0.057	0.028	0.050	~~0.055~~ 0.065

(*Portions of Table not shown remain unchanged)*

Reason: In the last code cycle the primary change to the residential IECC was DOE's EC13. The insulation and fenestration part of that change was nicely balanced between increased energy efficiency and cost, picking out the places where the insulation had value. DOE's change increased insulation where it had he most value. Subsequently, several updates were made to DOE's proposal that increased the insulation requirements in areas which were not as justified. This leaves the insulation increases that DOE had proposed and removes that went beyond the DOE proposal. This change retains the seven increased insulation requirements DOE made and undoes the seven that were not in DOE's proposal.

Cost Impact: The code change proposal will not increase the cost of construction.

RE31-13

Public Hearing:	Committee:	AS	AM	D
	Assembly:	ASF	AMF	DF

R402.1.1T#2-EC-CONNER

RE32 – 13

Table R402.1.1 (IRC Table N1102.1.1)

Proponent: Tom Kositzky, Representing Coalition for Fair Energy Codes

Revise as follows:

TABLE R402.1.1 (N1102.1.1)
INSULATION AND FENESTRATION REQUIREMENTS BY COMPONENT[a]

CLIMATE ZONE	FENESTRATION *U*-FACTOR[b]	SKYLIGHT[b] *U*-FACTOR	GLAZED FENESTRATION SHGC[b,e]	CEILING *R*-VALUE	WOOD FRAME WALL *R*-VALUE	MASS WALL *R*-VALUE[i]	FLOOR *R*-VALUE	BASEMENT[c] WALL *R*-VALUE	SLAB[d] *R*-VALUE & DEPTH	CRAWL SPACE[c] WALL *R*-VALUE
1	NR	0.75	0.25	30	13	3 / 4	13	0	0	0
2	0.40	0.65	0.25	38	13	4 / 6	13	0	0	0
3	0.35	0.55	0.25	38	20 or 13+5[h]	8/13	19	5/13[f]	0	5 / 13
4 except Marine	0.35	0.55	0.40	38	20 or 13+5[h]	8 / 13	19	10 / 13	10, 2 ft	10/13
5 and Marine 4	0.32	0.55	NR	49	20 or 13+5[h]	13 / 17	30[g]	15/19	10,2ft	15/19
6	0.32	0.55	NR	49	20+5 or 13+5[h]	15 / 20	30[g]	15/19	10,4ft	15/19
7 and 8	0.32	0.55	NR	49	20+5 or 13+10[h] or 28	19 / 21	38[g]	15/19	10,4ft	15/19

(*Portions of Table not shown remain unchanged.)*

Reason: The purpose of this code change proposal is to ensure product neutrality with regards to the building code. It is not appropriate for the code to require builders in Climate Zones 7 and 8 to use a specific product type (continuous insulation or insulated siding) to meet the prescriptive requirements when other equitable options are readily available. The 2012 IECC set a prescriptive mandate for the use of continuous insulation in the aforementioned zones. This proposal establishes a cavity-only insulation option of R28 for these climate zones.

The *U*-factor calculation tables below illustrate the performance equivalency between the current prescriptive *R*-values and the proposed cavity insulation-only *R*-value option. Use of the cavity insulation-only option will likely require deeper framing members to accommodate thicker insulation that can reach the minimum level of R28. The *U*-factor calculations assume that the continuous insulation wall assemblies use let-in-bracing to meet the IRC requirements for wall bracing.

Table 1 shows the *U*-factor calculations for a 2x6 framed wall with R20 cavity insulation plus R5 continuous insulation, and for a 2x8 framed wall using R28 cavity insulation with 3/8-inch thick wood panel sheathing (which is the minimum thickness of wood panel bracing allowed in the IRC). Both calculations yield a wall *U*-factor of 0.046.

Table 2 shows the *U*-factor calculation for a 2x4 framed wall with R13 cavity insulation and R10 continuous insulation, and also a calculation for a 2x8 framed wall using R28 cavity insulation with the more common 7/16-inch thick wood structural panel sheathing. The calculations yield *U*-factors of 0.045 and 0.046, respectively.

This proposed code change will provide additional prescriptive options to designers and builders in these two Climate Zones.

We request the committee's support of this proposal.

Table 1. Climate Zones 7-8 Wood Framed Walls

(R20+5 and R28)

Wall Thermal Resistance by Component	R20+5 Wall - (2x6)			Proposed R28 Wall - (2x8)		
	R-Value Studs	R-Value Cavity	Assembly Value	R-Value Studs	R-Value Cavity	Assembly Value
Outside Air Film	0.25			0.25		
Siding	0.59			0.59		
Continuous Insulation	5			0		
Wood Structural Panel Sheathing (3/8")	0			0.47		
Stud/Cavity Insulation	6.875	20		9.063	28	
1/2" Drywall	0.45			0.45		
Inside Air Film	0.68			0.68		
Studs at 16" o.c.	25%	75%		25%	75%	
Total Wall R-Values	13.85	26.97	**21.80**	11.50	30.44	**21.56**
Total Wall U-Factors	0.072	0.037	**0.0459**	0.087	0.033	**0.0464**

Table 2. Climate Zones 7-8 Wood Framed Walls
(R13+10 and R28)

Wall Thermal Resistance by Component	R13+10 Wall - (2x4)			Proposed R28 Wall (2x8 with 7/16" sheathing)		
	R-Value Studs	R-Value Cavity	Assembly Value	R-Value Studs	R-Value Cavity	Assembly Value
Outside Air Film	0.25			0.25		
Siding	0.59			0.59		
Continuous Insulation	10			0		
Wood Structural Panel Sheathing (7/16")	0			0.62		
Stud/Cavity Insulation	4.375	13		9.063	28	
1/2" Drywall	0.45			0.45		
Inside Air Film	0.68			0.68		
Studs at 16" o.c.	25%	75%		25%	75%	
Total Wall R-Values	16.35	24.97	**22.06**	11.65	30.59	**21.75**
Total Wall U-Factors	0.061	0.040	**0.0453**	0.086	0.033	**0.0460**

Cost Impact: The code change proposal will not increase the cost of construction.

RE32-13

Public Hearing:	Committee:	AS	AM	D
	Assembly:	ASF	AMF	DF

R402.1.1T #1-EC-KOSITZKY

RE33 – 13

Table R402.1.1 (IRC Table N1102.1.1), Table R402.1.3 (IRC Table N1102.1.3)

Proponent: Tom Kositzky, Representing Coalition for Fair Energy Codes

Revise as follows:

TABLE R402.1.1 (N1102.1.1)
INSULATION AND FENESTRATION REQUIREMENTS BY COMPONENT[a]

CLIMATE ZONE	FENESTRATION *U*-FACTOR[b]	SKYLIGHT[b] *U*-FACTOR	GLAZED FENESTRATION SHGC[b,e]	CEILING *R*-VALUE	WOOD FRAME WALL *R*-VALUE	MASS WALL *R*-VALUE[i]	FLOOR *R*-VALUE	BASEMENT[c] WALL *R*-VALUE	SLAB[d] *R*-VALUE & DEPTH	CRAWL SPACE[c] WALL *R*-VALUE
1	NR	0.75	0.25	30	13	3 / 4	13	0	0	0
2	0.40	0.65	0.25	38	13	4 / 6	13	0	0	0
3	0.35	0.55	0.25	38	20 or 13+5[h]	8/13	19	5/13[f]	0	5 / 13
4 except Marine	0.35	0.55	0.40	38	20 or 13+5[h]	8 / 13	19	10 / 13	10, 2 ft	10/13
5 and Marine 4	0.32	0.55	NR	49	20 or 13+5[h]	13 / 17	30[g]	15/19	10,2ft	15/19
6	0.32	0.55	NR	49	20+2~~5~~ or 13+6.5~~10~~[h] or 24	15 / 20	30[g]	15/19	10,4ft	15/19
7 and 8	0.32	0.55	NR	49	20+5 or 13+10[h]	19 / 21	38[g]	15/19	10,4ft	15/19

(*Portions of Table not shown remain unchanged)*

TABLE R402.1.3 (N1102.1.3)
EQUIVALENT U-FACTORS[a]

CLIMATE ZONE	FENESTRATION *U*-FACTOR	SKYLIGHT *U*-FACTOR	CEILING *U*-FACTOR	FRAME WALL *U*-FACTOR	MASS WALL *U*-FACTOR[b]	FLOOR *U*-FACTOR	BASEMENT WALL *U*-FACTOR	CRAWL SPACE WALL *U*-FACTOR
1	0.50	0.75	0.035	0.082	0.197	0.064	0.360	0.477
2	0.40	0.65	0.030	0.082	0.165	0.064	0.360	0.477
3	0.35	0.55	0.030	0.057	0.098	0.047	0.091[c]	0.136
4 except Marine	0.35	0.55	0.026	0.057	0.098	0.047	0.059	0.065
5 and Marine 4	0.32	0.55	0.026	0.057	0.082	0.033	0.050	0.055

6	0.32	0.55	0.026	~~0.048~~ 0.055	0.060	0.033	0.050	0.055
7 and 8	0.32	0.55	0.026	0.048	0.057	0.028	0.050	0.055

(*Portions of Table not shown remain unchanged)*

Reason Statement: The increase in wood frame wall *R*-value in Climate Zone 6 of Table R402.1.1 of the 2012 IECC was essentially arbitrary and is without basis other than it represents the *R*-value for a readily available, specific type of foam sheathing. The requirements also mandate the use of continuous insulation since no cavity-only insulation option was included in the prescriptive table. Stakeholders around the country in Climate Zone 6 do not consider this level of insulation to be cost effective nor necessary in this climate zone. Due in part to such high insulation requirements, the 2012 IECC is not being adopted consistently in these states.

This proposal offers a compromise by increasing stringency significantly beyond the requirements of the 2009 IECC with more cost effective alternatives. The wall insulation can be met with continuous insulation and cavity insulation options (R20+2 or R13+6.5) or the cavity-only option of R24. This proposal creates much more cost effective provisions that will offer builders more alternatives in meeting the wood frame wall requirements found in Table R402.1.1. More choices will help to gain greater stakeholder buy-in and will enable the 2015 IECC to gain greater acceptance, thereby creating more energy conservation opportunities.

In combination with these changes in Table 402.1.1, we propose a corresponding change to the *U*-factor listed in Table R402.1.3 for wood frame walls. Tables 1 and 2 below provide the *U*-factor calculations for all three of the prescriptive wall alternatives identifying that all of the systems meet the proposed *U*-factor target. The right hand columns of Table 2 show that the same *U*-factor is achieved when the commonly used 7/16-inch wood structural panel sheathing is used rather than the code minimum 3/8-inch sheathing.

We ask the support of the committee for this proposal.

Table 1. - Climate Zone 6 Wood Framed Walls

Wall Thermal Resistance by Component	2x6 Wall - R20+2			2x6 Wall - R24		
	R-Value Studs	R-Value Cavity	Assembly Value	R-Value Studs	R-Value Cavity	Assembly Value
Outside Air Film	0.25			0.25		
Siding	0.59			0.59		
Continuous Insulation	2			0		
Wood Structural Panel Sheathing (3/8”)	0			0.47		
Stud/Cavity Insulation	6.875	20		6.875	24	
1/2" Drywall	0.45			0.45		
Inside Air Film	0.68			0.68		
Studs at 16" o.c.	25%	75%		25%	75%	
Total Wall R-Values	10.85	23.97	**18.40**	9.32	26.44	**18.11**
Total Wall U-Factors	0.092	0.042	**0.0543**	0.107	0.038	**0.0552**

Table 2. - Climate Zone 6 Wood Framed Walls

Wall Thermal Resistance by	2x4 Wall - R13+6.5	2x6 Wall - R24

Component	R-Value Studs	R-Value Cavity	Assembly Value	R-Value Studs	R-Value Cavity	Assembly Value
Outside Air Film	0.25			0.25		
Siding	0.59			0.59		
Continuous Insulation	6.5			0		
Wood Structural Panel Sheathing (7/16")	0			0.62		
Stud/Cavity Insulation	4.375	13		6.875	24	
1/2" Drywall	0.45			0.45		
Inside Air Film	0.68			0.68		
Studs at 16" o.c.	25%	75%		25%	75%	
Total Wall R-Values	12.85	21.47	**18.38**	9.47	26.59	**18.31**
Total Wall U-Factors	0.078	0.047	**0.0544**	0.106	0.038	**0.0546**

Cost Impact: The code change proposal will not increase the cost of construction.

RE33-13

Public Hearing: Committee: AS AM D
Assembly: ASF AMF DF

R402.1.1T #2-EC-KOSITZKY

RE34 – 13

Table R402.1.1 (IRC N1102.1.1), Table R402.1.3 (IRC Table N1102.1.3)

Proponent: Don Surrena, CBO, National Association of Home Builders (NAHB) (dsurrena@nahb.org)

Revise as follows:

TABLE R402.1.1 (N1102.1.1)
INSULATION AND FENESTRATION REQUIREMENTS BY COMPONENT[a]

CLIMATE ZONE	FENESTRATION *U*-FACTOR	SKYLIGHT[b] *U*-FACTOR	GLAZED FENESTRATION SHGC[b,e]	CEILING *R*-VALUE	WOOD FRAME WALL *R*-VALUE	MASS WALL *R*-VALUE[i]	FLOOR *R*-VALUE	BASEMENT[c] WALL *R*-VALUE	SLAB[d] *R*-VALUE & DEPTH	CRAWL SPACE[c] WALL *R*-VALUE
1	NR	0.75	0.25	30	13	3/4	13	0	0	0
2	0.40	0.65	0.25	38	13	4/6	13	0	0	0
3	0.35	0.55	0.25	38	20 or 13+5[h,i]	8/13	19	5/13[f]	0	5 / 13
4 except Marine	0.35	0.55	0.40	38	20 or 13+5[h,i]	8/13	19	10 / 13	10, 2 ft	10/13
5 and Marine 4	0.32	0.55	NR	49	20 or 13+5[h,i]	13/ 7	30[g]	15/19	10,2ft	15/19
6	0.32	0.55	NR	49	20 or 13+5[h,i] ~~20+5 or 13+10[h,i]~~	15/20	30[g]	15/19	10,4ft	15/19
7 and 8	0.32	0.55	NR	49	20 or 13+5[h,i] ~~20+5 or 13+10[h,i]~~	19/21	38[g]	15/19	10,4ft	15/19

For SI: 1 foot = 304.8 mm.

(Portions of Table not shown remain unchanged.).

TABLE 402.1.3 (N1102.1.3)
EQUIVALENT *U*-FACTORS[a]

CLIMATE ZONE	FENESTRATION *U*-FACTOR	SKYLIGHT *U*-FACTOR	CEILING *U*-FACTOR	FRAME WALL *U*-FACTOR	MASS WALL *U*-FACTOR[b]	FLOOR *U*-FACTOR	BASEMENT WALL *U*-FACTOR	CRAWL SPACE WALL *U*-FACTOR
1	NR	0.75	0.035	0.082	0.197	0.064	0.360	0.477
2	0.40	0.65	0.030	0.082	0.165	0.064	0.360	0.477

3	0.35	0.55	0.030	0.057	0.098	0.047	0.091[c]	0.136
4 except Marine	0.35	0.55	0.030	0.057	0.098	0.047	0.059	0.065
5 and Marine 4	0.32	0.55	0.026	0.057	0.082	0.033	0.050	0.055
6	0.32	0.55	0.026	~~0.048~~ 0.057	0.060	0.033	0.050	0.055
7 and 8	0.32	0.55	0.026	~~0.048~~ 0.057	0.057	0.028	0.050	0.055

(Portions of Table not shown remain unchanged.).

Reason: The prescriptive wall requirement increased to R-20+R5 in Climate zones 6, 7 and 8 of the 2012 IECC. The additional cost for this is estimated at $1,819 for 1,016 square feet of wall. This makes the simple payback between 26 and 55 years depending on the climate zone. This also will create a negative cash flow for the consumer in all cases.

Climate Zone	Representative City	Basement Wall R-Value Change	Energy Savings	Incremental Cost	Simple Payback
6	Minneapolis, MN	R-20->R-20+5	$33/yr	$1,819 ($1.79/ft2)	55 years
7	Bemidgi, MN	R-20->R-20+5	$41/yr	$1,819 ($1.79/ft2)	44 years
8	Fairbanks, AK	R-20->R-20+5	$71/yr	$1,819 ($1.79/ft2)	26 years

The energy modeling was done using the Energy Plus simulation engine and BEopt version 1.4, Cost figures came from ASHRAE RP-1481.

Cost Impact: The code change proposal will not increase the cost of construction.

RE34-13

Public Hearing: Committee: AS AM D
Assembly: ASF AMF DF

R402.1.1T#4-EC-SURRENA

RE35 – 13

Table R402.1.1 (IRC Table N1102.1.1), Table R402.1.3 (IRC Table N1102.1.3)

Proponent: Don Surrena, CBO, National Association of Home Builders (NAHB) (dsurrena@nahb.org)

Revise as follows:

TABLE R402.1.1 (N1102.1.1)
INSULATION AND FENESTRATION REQUIREMENTS BY COMPONENT[a]

CLIMATE ZONE	FENESTRATION *U*-FACTOR[b]	SKYLIGHT[b] *U*-FACTOR	GLAZED FENESTRATION SHGC[b,e]	CEILING *R*-VALUE	WOOD FRAME WALL *R*-VALUE	MASS WALL *R*-VALUE[i]	FLOOR *R*-VALUE	BASEMENT[c] WALL *R*-VALUE	SLAB[d] *R*-VALUE & DEPTH	CRAWL SPACE[c] WALL *R*-VALUE
1	NR	0.75	0.25	30	13	3 / 4	13	0	0	0
2	0.40	0.65	0.25	38	13	4 / 6	13	0	0	0
3	0.35	0.55	0.25	38	13 ~~20 or 13+5[h]~~	8/13	19	5/13[f]	0	5 / 13
4 except Marine	0.35	0.55	0.40	38	20 or 13+5[h]	8 / 13	19	10 / 13	10, 2 ft	10/13
5 and Marine 4	0.32	0.55	NR	49	20 or 13+5[h]	13 / 17	30[g]	15/19	10,2ft	15/19
6	0.32	0.55	NR	49	20+5 or 13+5[h]	15 / 20	30[g]	15/19	10,4ft	15/19
7 and 8	0.32	0.55	NR	49	20+5 or 13+10[h]	19 / 21	38[g]	15/19	10,4ft	15/19

(Portions of Table not shown remain unchanged.)

TABLE 402.1.3 (N1102.1.3)
EQUIVALENT *U*-FACTORS[a]

CLIMATE ZONE	FENESTRATION *U*-FACTOR	SKYLIGHT *U*-FACTOR	CEILING *U*-FACTOR	FRAME WALL *U*-FACTOR	MASS WALL *U*-FACTOR[b]	FLOOR *U*-FACTOR	BASEMENT WALL *U*-FACTOR	CRAWL SPACE WALL *U*-FACTOR
1	NR	0.75	0.035	0.082	0.197	0.064	0.360	0.477
2	0.40	0.65	0.030	0.082	0.165	0.064	0.360	0.477
3	0.35	0.55	0.030	~~0.057~~ 0.082	0.098	0.047	0.091[c]	0.136
4 except Marine	0.35	0.55	0.030	0.057	0.098	0.047	0.059	0.065
5 and Marine 4	0.32	0.55	0.026	0.057	0.082	0.033	~~0.050~~ 0.059	0.055
6	0.32	0.55	0.026	0.048	0.060	0.033	0.050	0.055

7 and 8	0.32	0.55	0.026	0.048	0.057	0.028	0.050	0.055

(*Portions of Table not shown remain unchanged.)*

Reason: Frame wall requirements in climate zone 3 changed from R-13 to R-20 which was is not cost effective for the consumer.

Climate Zone	Representative City	Wall R-Value Change	Energy Savings	Incremental Cost	Simple Payback
3	Atlanta, GA	R-13->R-20	$50/yr	$1,199	24 years

The energy modeling was done using the Energy Plus simulation engine and BEopt version 1.4, Cost figures came from ASHRAE RP-1481. Not only is the payback 24 years, but for a consumer, there would be a negative cash flow based on the incremental cost and energy savings. The increase in the monthly mortgage would be $6.43 (@ 5%) and the average monthly energy savings would be $4.17.

The values being modified by this proposal are the same as what was proposed by the Department of Energy in their proposal EC13 from the last cycle. The values currently adopted were an increase from proposals not submitted by the Department of Energy.

Cost Impact: The code change proposal will not increase the cost of construction.

RE35-13

Public Hearing:	Committee:	AS	AM	D
	Assembly:	ASF	AMF	DF

R402.1.1T#3-EC-SURRENA

RE36 – 13

Section R202 (NEW) (IRC N1101.9 (NEW)), Table R402.1.1 (IRC Table N1102.1.1)

Proponent: Don Surrena, CBO, National Association of Home Builders (NAHB) (dsurrena@nahb.org)

Revise as follows:

TABLE R402.1.1 (N1102.1.1)
INSULATION AND FENESTRATION REQUIREMENTS BY COMPONENT[a]

CLIMATE ZONE	FENESTRATION *U*-FACTOR[b]	SKYLIGHT[b] *U*-FACTOR	GLAZED FENESTRATION SHGC[b,e]	CEILING *R*-VALUE	WOOD FRAME WALL *R*-VALUE	MASS WALL *R*-VALUE[i]	FLOOR *R*-VALUE	BASEMENT[c] WALL *R*-VALUE	SLAB[d] *R*-VALUE & DEPTH	CRAWL SPACE[c] WALL *R*-VALUE
1	NR	0.75	0.25	30	13	3/4	13	0	0	0
2	0.40	0.65	0.25	38	13	4/6	13	0	0	0
3	0.35	0.55	0.25	38	20 or 13+5[h,j]	8/13	19	5/13[f]	0	5 / 13
4 except Marine	0.35	0.55	0.40	38	20 or 13+5[h,j]	8/13	19	10 / 13	10, 2 ft	10/13
5 and Marine 4	0.32	0.55	NR	49	20 or 13+5[h,j]	13/17	30[g]	15/19	10, 2ft	15/19
6	0.32	0.55	NR	49	20+5 or 13+10[h,j]	15/20	30[g]	15/19	10, 4ft	15/19
7 and 8	0.32	0.55	NR	49	20+5 or 13+10[h,j]	19/21	38[g]	15/19	10, 4ft	15/19

(Portions of Table not shown remain unchanged)

For SI: 1 foot = 304.8 mm.

j. R-18 insulation shall be permitted in place of the R-20 requirement provided the wall *framing factor* is 20 percent or less or exterior walls with 24" o.c. nominal vertical stud spacing.

Add new definition as follows:

FRAMING FACTOR. The fraction of the total building component area that is structural framing.

Reason: The ASHRAE Handbook of Fundamentals and ASHRAE Transaction 1995 Volume 101, Part 2 assumes that wood framed walls have a framing factor of 25%. Meaning 25 percent of the wall area consists of structural framing members and the remainder of the wall is a cavity suitable for installing insulation. When calculating the U-factor for a wall assembly, a high framing factor increases the overall assembly U-Factor. Reducing the framing factor will also provide an increase in the thermal performance of the wall.

This proposal provides an option for a thermally equivalent tradeoff for 2x6 wall assemblies which have reduced framing factors and R-18 insulation. Below are the calculations showing equal U-Factors for both assemblies (0.060).

Wall Thermal Resistance by Component	2x6 Wall R-20 25%FF (16" o.c.)			2x6 Wall R-18 20%FF		
	R-Value Studs	R-Value Cavity	Assembly U-Factor	R-Value Studs	R-Value Cavity	Assembly U-Factor
Wall - Outside Winter Air Film[A]	0.17			0.17		
Siding - Vinyl[A]	0.62			0.62		
Continuous Insulation	0			0		
OSB - 7/16"[A]	0.62			0.62		
SPF Stud/Cavity Insulation	6.875	20		6.875	18	
1/2" Drywall [A]	0.45			0.45		
Inside Air Film[A]	0.68			0.68		
Studs at 16" o.c. [A]	25%	75%		20%	80%	
Total Wall R-Values	9.42	22.54		9.42	20.54	
Total Wall U-Factor	0.106	0.044	**0.060**	0.106	0.049	**0.060**
[A]2009 ASHRAE Handbook of Fundamentals						

Enermodal, 2001. Characterization of Framing Factors for Low-Rise Residential Building Envelopes (904-RP). Final Report prepared for ASHRAE, Atlanta, GA (USA)

Cost Impact: The code change proposal will not increase the cost of construction.

RE36-13

Public Hearing:	Committee:	AS	AM	D
	Assembly:	ASF	AMF	DF

R402.1.1T#5-EC-SURRENA

RE37 – 13
Table R402.1.1 (IRC Table N1102.1.1)

Proponent: Brenda A. Thompson, Clark County Building Department, Las Vegas NV, representing the ICC Sustainability, Energy & High Performance Code Action Committee (SEHPCAC) (bat@clarkcounty.gov)

Revise as follows:

TABLE R402.1.1 (N1102.1.1)
INSULATION AND FENESTRATION REQUIREMENTS BY COMPONENT[a]

CLIMATE ZONE	FENES-TRATION *U*-FACTOR[b]	SKYLIGHT[b] *U*-FACTOR	GLAZED FENES-TRATION SHGC[b,e]	CEILING *R*-VALUE	WOOD FRAME WALL *R*-VALUE	MASS WALL *R*-VALUE[i]	FLOOR *R*-VALUE	BASEMENT[c] WALL *R*-VALUE	SLAB[d] *R*-VALUE AND DEPTH	CRAWL SPACE[c] WALL *R*-VALUE
1	NR	0.75	0.25	30	13	3/4	13	0	0	0
2	0.40	0.65	0.25	38	13	4/6	13	0	0	0
3	0.35	0.55	0.25	38	20 or 13+5[h]	8/13	19	5/13[f]	0	5/13
4 except Marine	0.35	0.55	0.40	49	20 or 13+5[h]	8/13	19	10/13	10, 2 ft	10/13
5 and Marine 4	0.32	0.55	NR	49	20 or 13+5[h]	13/17	30[g]	15/19	10, 2 ft	15/19
6	0.32	0.55	NR	49	20+5 or 13+10[h] or 22	15/20	30[g]	15/19	10, 4 ft	15/19
7 ~~and 8~~	0.32	0.55	NR	49	20+5 or 13+10 or 27	15/20	38	15/19	10, 4 ft	15/19
8	0.32	0.55	NR	49	20+7.5 or 32	19/21	38[g]	15/19	10, 4 ft	15/19

For SI: 1 foot = 304.8 mm.

a. *R*-values are minimums. *U*-factors and SHGC are maximums. When insulation is installed in a cavity which is less than the label or design thickness of the insulation, the installed *R*-value of the insulation shall not be less than the *R*-value specified in the table.

b. The fenestration *U*-factor column excludes skylights. The SHGC column applies to all glazed fenestration. Exception: Skylights may be excluded from glazed fenestration SHGC requirements in Climate Zones 1 through 3 where the SHGC for such skylights does not exceed 0.30.

c. "15/19" means R-15 continuous insulation on the interior or exterior of the home or R-19 cavity insulation at the interior of the basement wall. "15/19" shall be permitted to be met with R-13 cavity insulation on the interior of the basement wall plus R-5 continuous insulation on the interior or exterior of the home. "10/13" means R-10 continuous insulation on the interior or exterior of the home or R-13 cavity insulation at the interior of the basement wall.

d. R-5 shall be added to the required slab edge *R*-values for heated slabs. Insulation depth shall be the depth of the footing or 2 feet, whichever is less in Climate Zones 1 through 3 for heated slabs.

e. There are no SHGC requirements in the Marine Zone.

f. Basement wall insulation is not required in warm-humid locations as defined by Figure R301.1 and Table R301.1.

g. Or insulation sufficient to fill the framing cavity, R-19 minimum.

h. First value is cavity insulation, second is continuous insulation or insulated siding, so "13+5" means R-13 cavity insulation plus R-5 continuous insulation or insulated siding. If structural sheathing covers 40 percent or less of the exterior, continuous insulation *R*-value shall be permitted to be reduced by no more than R-3 in the locations where structural sheathing is used – to maintain a consistent total sheathing thickness.

i. The second *R*-value applies when more than half the insulation is on the interior of the mass wall.

Reason: This proposal is submitted by the ICC Sustainability Energy and High Performance Code Action Committee (SEHPCAC). The SEHPCAC was established by the ICC Board of Directors to pursue opportunities to improve and enhance assigned International Codes or portion thereof. This includes both the technical aspects of the codes as well as the code content in terms of scope and application of referenced standards. Since its inception in July, 2011, the SEHPCAC has held 3 open meetings and over 30 workgroup calls which included members of the SEHPCAC as well as any interested party to discuss and debate proposed changes and public comments. Related documentation and reports are posted on the SEHPCAC website at: http://www.iccsafe.org/cs/SEHPCAC/Pages/default.aspx.

The SEHPCAC found discrepancies in the Commercial Energy Code RESIDENTIAL table. The SEHPCAC has proposed a fix to the discrepancy in Table C402.1.1. In an effort to further enhance the Residential Energy Code, the SEHPCAC proposes to include a so-called "Cavity Only" insulation solution in the R Values table. The Task Group assigned to this task looked at using the ASHRAE procedures to calculate an R-value based on the existing table entry of cavity insulation plus continuous insulation (e.g. 20+5 in CZ 6 & 7), and the U-factor entry associated with the respective CZ cell. In addition, the Task Group looked at the Cavity Only requirements for Residential wood frame walls from the Commercial Energy Code. The values shown here are those from the Wood Frame Wall section of the Commercial Energy Code. The SEHPCAC determined that the energy performance of wood frame wall assemblies in a residential use would be effectively similar in either the commercial group or the noncommercial group. Thus the SEHPCAC chose to propose the same values in this table. This proposal also splits climate Zone 8 away from 7 and then plugs in higher R-value into the CZ8 cell for wood frame walls. The rest of the CZ 8 cells simply duplicate the CZ 7 values.

Please note that the SEHPCAC has also submitted other proposals that are coordinated with this proposal and are intended to clarify and improve the usability of the code's prescriptive building thermal envelope provisions. This proposal, however, is intended to stand alone and is not contingent upon the success of other SEHPCAC proposals.

Cost Impact: This proposal will increase construction costs in Climate Zone 8 only.

RE37-13

Public Hearing:	Committee:	AS	AM	D
	Assembly:	ASF	AMF	DF

R402.1.1T#1-EC-THOMPSON-SEHPCAC

RE38 – 13

Table R402.1.1 (IRC Table N 1102.1.1), Table R402.1.3 (IRC Table N1102.1.3)

Proponent: Martha G. VanGeem representing the Masonry Alliance for Codes and Standards (Martha.vangeem@gmail.com)

Revise as follows:

TABLE R402.1.1 (N1102.1.1)
INSULATION AND FENESTRATION REQUIREMENTS BY COMPONENT[a]

CLIMATE ZONE	FENESTRATION *U*-FACTOR[b]	SKYLIGHT[b] *U*-FACTOR	GLAZED FENESTRATION SHGC[b,e]	CEILING *R*-VALUE	WOOD FRAME WALL *R*-VALUE	MASS WALL *R*-VALUE[i]	FLOOR *R*-VALUE	BASEMENT[c] WALL *R*-VALUE	SLAB[d] *R*-VALUE & DEPTH	CRAWL SPACE[c] WALL *R*-VALUE
1	NR	0.75	0.25	30	13	3 / 4	13	0	0	0
2	0.40	0.65	0.25	38	13	4 / 6	13	0	0	0
3	0.35	0.55	0.25[e]	38	~~20 or 13+5[h]~~ 13	~~8/13~~ 5 / 8	19	5/13[f]	0	5 / 13
4 except Marine	0.35	0.55	0.40	49	20 or 13+5[h]	8 / 13	19	10 / 13	10, 2 ft	10/13
5 and Marine 4	0.32	0.55	NR	49	20 or 13+5[h]	13 / 17	30[g]	15/19	10,2ft	15/19
6	0.32	0.55	NR	49	20+5 or 13+10[h]	15 / 20	30[g]	15/19	10,4ft	15/19
7 and 8	0.32	0.55	NR	49	20+5 or 13+10[h]	19 / 21	38[g]	15/19	10,4ft	15/19

(Portions of Table not shown remain unchanged)

TABLE R402.1.3 (N1102.1.3)
EQUIVALENT *U*-FACTORS[a]

CLIMATE ZONE	FENESTRATION *U*-FACTOR	SKYLIGHT *U*-FACTOR	CEILING *U*-FACTOR	FRAME WALL *U*-FACTOR	MASS WALL *U*-FACTOR[b]	FLOOR *U*-FACTOR	BASEMENT WALL *U*-FACTOR	CRAWL SPACE WALL *U*-FACTOR
1	NR	0.75	0.035	0.082	0.197	0.064	0.360	0.477
2	0.40	0.65	0.030	0.082	0.165	0.064	0.360	0.477
3	0.35	0.55	0.030	~~0.057~~ 0.082	~~0.098~~ 0.141	0.047	0.091[c]	0.136
4 except Marine	0.35	0.55	0.026	0.057	0.098	0.047	0.059	0.065
5 and Marine 4	0.32	0.55	0.026	0.057	0.082	0.033	0.050	0.055
6	0.32	0.55	0.026	0.048	0.060	0.033	0.050	0.055
7 and 8	0.32	0.55	0.026	0.048	0.057	0.028	0.050	0.055

(Portions of Table not shown remain unchanged)

Reason: It is not practical or cost effective to require more than R-13 insulation for wood frame walls in Climate Zone 3. If this value for frame walls is changed back to R13 as in Table 402.1.1 in the 2009 IECC, then the mass wall R-value in Table 402.1.1 should be changed back to the mass wall R-value for Climate Zone 3 in the 2009 IECC. Similarly, the U-factor should be changed back to the mass wall U-factor in Table 402.1.3 of the 2009 IECC. These changes are indicated above.

The equivalency between mass wall and frame wall R-values in Climate Zone 3 was previously demonstrated for previous versions of the IECC. Mass walls have significant energy saving benefits in Climate Zone 3.

Cost Impact: The code change proposal will not increase the cost of construction.

RE38-13

Public Hearing:	Committee:	AS	AM	D
	Assembly:	ASF	AMF	DF

R402.1.1T-EC-VANGEEM

RE39– 13
Table R402.1.1 (IRC Table N1102.1.1)

Proponent: Craig Conner, Building Quality, representing self (craig.conner@mac.com)

Revise as follows:

TABLE R402.1.1 (N1102.1.1)
INSULATION AND FENESTRATION REQUIREMENTS BY COMPONENT[a]

CLIMATE ZONE	FENESTRATION *U*-FACTOR[b]	SKYLIGHT[b] *U*-FACTOR	GLAZED FENESTRATION SHGC[b, e]	CEILING *R*-VALUE	WOOD FRAME WALL *R*-VALUE	MASS WALL *R*-VALUE[i]	FLOOR *R*-VALUE	BASEMENT[c] WALL *R*-VALUE	SLAB[d] *R*-VALUE & DEPTH	CRAWL SPACE[c] WALL *R*-VALUE
1	NR	0.75	0.25	30	13	3/4	13	0	0	0
2	0.40	0.65	0.25	38	13	4/6	13	0	0	0
3	0.35	0.55	0.25	38	20 or 13+5[h]	8/13	19	5/13[f]	0	5/13
4 except Marine	0.35	0.55	0.40	49	20 or 13+5[h]	8/13	19	10 /13	10, 2 ft	10/13
5 and Marine 4	0.32	0.55	NR	49	20 or 13+5[h]	13/17	30[g]	15/19	10, 2 ft	15/19
6	0.32	0.55	NR	49	20+5 or 13+10[h]	15/20	30[g]	15/19	10, 4 ft	15/19
7 and 8	0.32	0.55	NR	49	20+5 or 13+10[h]	19/21	38[g]	15/19	10, 4 ft	15/19

(Portions of Table not shown remain unchanged)

For SI: 1 foot = 304.8 mm.

~~I. The second *R*-value applies when more than half the insulation is on the interior of the mass wall.~~

i. Continuous insulation shall be permitted to be reduced by R-5 with any one of the following:
Opaque doors <= 0.17 and windows U-factor <=0.28, or
framing factor <=16% and window U-factors <=0.28 or
window U-factors <=0.25

Reason: Provides simple options for those who don't want to do continuous insulation.

Cost Impact: The code change proposal will not increase the cost of construction.

RE_-13

Public Hearing: Committee: AS AM D
Assembly: ASF AMF DF

R402.1.1-EC-CONNER

RE40 – 13

Table R402.1.1 (IRC Table N1102.1.1), Table R402.1.3 (IRC Table N1102.1.3)

Proponent: Don Surrena, CBO, National Association of Home Builders (NAHB) (dsurrena@nahb.org)

Revise as follows:

TABLE R402.1.1 (N1102.1.1)
INSULATION AND FENESTRATION REQUIREMENTS BY COMPONENT

CLIMATE ZONE	FENESTRATION *U*-FACTOR[b]	SKYLIGHT[b] *U*-FACTOR	GLAZED FENESTRATION SHGC[b,e]	CEILING *R*-VALUE	WOOD FRAME WALL *R*-VALUE	MASS WALL *R*-VALUE[i]	FLOOR *R*-VALUE	BASEMENT[c] WALL *R*-VALUE	SLAB[d] *R*-VALUE & DEPTH	CRAWL SPACE[c] WALL *R*-VALUE
1	NR	0.75	0.25	30	13	3 / 4	13	0	0	0
2	0.40	0.65	0.25	38	13	4 / 6	13	0	0	0
3	0.35	0.55	0.25	38	20 or 13+5[h]	8/13	19	5/13[f]	0	5 / 13
4 except Marine	0.35	0.55	0.40	38	20 or 13+5[h]	8 / 13	19	10 / 13	10, 2 ft	10/13
5 and Marine 4	0.32	0.55	NR	49	20 or 13+5[h]	13 / 17	30[g]	~~15/19~~ 10/13	10,2ft	15/19
6	0.32	0.55	NR	49	20+5 or 13+5[h]	15 / 20	30[g]	15/19	10,4ft	15/19
7 and 8	0.32	0.55	NR	49	20+5 or 13+10[h]	19 / 21	38[g]	15/19	10,4ft	15/19

For SI: 1 foot = 304.8 mm.

(Portions of Table not shown remain unchanged.)

TABLE 402.1.3 (N1102.1.3)
EQUIVALENT *U*-FACTORS[a]

CLIMATE ZONE	FENESTRATION *U*-FACTOR	SKYLIGHT *U*-FACTOR	CEILING *U*-FACTOR	FRAME WALL *U*-FACTOR	MASS WALL *U*-FACTOR[b]	FLOOR *U*-FACTOR	BASEMENT WALL *U*-FACTOR	CRAWL SPACE WALL *U*-FACTOR
1	NR	0.75	0.035	0.082	0.197	0.064	0.360	0.477
2	0.40	0.65	0.030	0.082	0.165	0.064	0.360	0.477
3	0.35	0.55	0.030	0.057	0.098	0.047	0.091[c]	0.136
4 except	0.35	0.55	0.030	0.057	0.098	0.047	0.059	0.065

Marine								
5 and Marine 4	0.32	0.55	0.026	0.057	0.082	0.033	~~0.050~~ 0.059	0.055
6	0.32	0.55	0.026	0.048	0.060	0.033	0.050	0.055
7 and 8	0.32	0.55	0.026	0.048	0.057	0.028	0.050	0.055

(Portions of Table not shown remain unchanged.)

Reason: The prescriptive basement wall requirement increased from R-10 to R-15 in the 2012 IECC. Calculations used to justify the change were based on energy models which had less sophisticated algorithms than Energy Plus which is now the preferred modeling software of the Department of Energy. When using Energy Plus, the energy savings in a 700 square foot basement totaled $7/yr in Chicago (Climate zone 5). The additional cost for this is conservatively estimated at $590. This makes the simple payback in excess of 58 years. This also will create a negative cash flow for the consumer. The values being modified by this proposal are the same as what was proposed by the Department of Energy in their proposal EC13 from the last cycle. The values currently adopted were an increase from proposals not submitted by the Department of Energy.

Climate Zone	Representative City	Basement Wall R-Value Change	Energy Savings	Incremental Cost	Simple Payback
5	Chicago, IL	R-10->R-15	$7/yr	$590 ($0.82/ft2)	84 years

The energy modeling was done using the Energy Plus simulation engine and BEopt version 1.4, Cost figures came from ASHRAE RP-1481

Cost Impact: The code change proposal will not increase the cost of construction.

RE40-13

Public Hearing:	Committee:	AS	AM	D
	Assembly:	ASF	AMF	DF

R402.1.1T#1-EC-SURRENA

RE41 – 13

R202, Table R402.1.1 (IRC Table N1102.1.1), R402.1.2 (IRC N1102.1.2)

Proponent: Craig Conner, Building Quality, representing self (craig.conner@mac.com)

Revise as follows:

TABLE R402.1.1 (N1102.1.1)
INSULATION AND FENESTRATION REQUIREMENTS BY COMPONENT[a]

h. First value is cavity insulation, second is continuous insulation ~~or insulated siding~~, so "13+5" means R-13 cavity insulation plus R-5 continuous insulation ~~or insulated siding~~. If structural sheathing covers 40 percent or less of the exterior, continuous insulation R-value shall be permitted to be reduced by no more than R-3 in the locations where structural sheathing is used – to maintain a consistent total sheathing thickness.

(Portions of Table not shown remain unchanged)

R402.1.2 (N1102.1.2) R- value computation. Insulation material used in layers, such as framing cavity insulation ~~and insulating sheathing~~ or continuous insulation, shall be summed to compute the corresponding component R-value. Framing and cavity insulation values shall be computed separately. The manufacturer's settled R-value shall be used for blown insulation. Computed R-values shall not include an R-value for other building materials or air films.

Add new definition as follows:

IECC SECTION R202 (IRC N1101.9)
GENERAL DEFINITIONS

CONTINUOUS INSULATION. Insulation in the opaque building envelope that extends across framing members without interruption by thermal bridges, except for fasteners and service openings. The insulation may be inside, outside or integral to the building envelope. When referring to an R-value in a multi-layer product, the term refers to the R-value of the insulation material.

Reason: This proposal clarifies what constitutes "continuous insulation". Several products would qualify as continuous insulation, including insulated sheathing and insulated siding; all combined under the term "continuous insulation".

The section on calculating R-values was written before the distinction between continuous and cavity insulation entered the code. The rewritten section better differentiates between "continuous" insulation that covers thermal breaks and "cavity" insulation that is separated by thermal breaks into a cavity. From a thermal performance standpoint the two perform significantly differently.

Cost Impact: The code change proposal will not increase the cost of construction.

RE41-13

Public Hearing:	Committee:	AS	AM	D
	Assembly:	ASF	AMF	DF

R402.1.2-EC-CONNER

RE42 – 13

R202 (New), Table R402.1.1 (IRC Table N1102.1.1), R402.1.2 (IRC N1102.1.2)

Proponent: Jay Crandell, P.E., ARES Consulting, representing Foam Sheathing Committee / American Chemistry Council (Jcrandell@aresconsulting.biz)

Revise as follows:

TABLE R402.1.1 (N1102.1.1)
INSULATION AND FENESTRATION REQUIREMENTS BY COMPONENT[a]

h. First value is cavity insulation, second is continuous insulation ~~or insulated siding~~, so "13 + 5" means R-13 cavity insulation plus R-5 continuous insulation ~~or insulated siding~~. If structural sheathing covers 40 percent or less of the exterior, continuous insulation *R*-value shall be permitted to be reduced by no more than R-3 in the locations where structural sheathing is used – to maintain a consistent total sheathing thickness.

(Portions of Table not shown remain unchanged)

R402.1.2 (N1102.1.2) Component *R*-value computation. Insulation material used in layers to provide the~~, such as~~ framing cavity insulation component or ~~and~~ the continuous insulation component ~~insulating sheathing~~, shall be summed to compute the corresponding insulation component *R*-value. The manufacturer's settled *R*-value shall be used for blown insulation. Computed *R*-values shall not include an *R*-value for other building materials or air films.

Add new definition as follows:

IECC SECTION R202 (IRC N1101.9)
GENERAL DEFINITIONS

CONTINUOUS INSULATION (ci): Insulation that is continuous across all structural members without thermal bridges other than fasteners and service openings. It is installed on the interior or exterior or is integral to any opaque surface of the building envelope.

Reason: This proposal provides a needed definition for continuous insulation (a term presently used in the IRC and IECC). The proposed definition is from the 2010 edition of ASHRAE 90.1 and provides an effective definition that is inclusive of all types of continuous insulation materials, including spray foam, insulated siding, foam sheathing, and others. Having this term defined permits simplification of existing code language where specific and sometimes limited lists of continuous insulation material types have been used. Thus, the code was scanned and two locations corrected to ensure consistent and inclusive use of the term continuous insulation. In the process, confusing or misleading language regarding computation of R-values for cavity or continuous insulation was identified and addressed. These are all considered to be editorial improvements.

Cost Impact: The code change proposal will not increase the cost of construction.

.

RE42-13

Public Hearing:	Committee:	AS	AM	D
	Assembly:	ASF	AMF	DF

R402.1.2-EC-CRANDELL

RE43 – 13
R402.1.2 (IRC N1102.1.2)

Proponent: John Woestman, Kellen Company, representing Extruded Polystyrene Foam Association (XPSA) (jwoestman@kellencompany.com)

Revise as follows:

R402.1.2 (N1102.1.2) *R*-value computation. Insulation material used in layers, such as framing cavity insulation ~~and insulating sheathing,~~ or continuous insulation shall be summed to compute the corresponding component *R*-value. The manufacturer's settled *R*-value shall be used for blown insulation. Computed *R*-values shall not include an *R*-value for other building materials or air films.

Reason: This proposal is intended to clarify intent. It does not alter, add or delete current code requirements or have a cost impact. The proposal makes these changes:

Revised "insulating sheathing" to "continuous insulation". This section of the code is making a distinction between insulation interrupted by framing and insulation that is not interrupted by framing. Insulated sheathing is a type of continuous insulation (insulation that is not interrupted by framing) but not the only type. Therefore this change clarifies the true intent of this section.

Inserted "corresponding". As currently written the language in this section is confusing and could be misinterpreted to mean that you can sum cavity and continuous insulation R-values together to come up with the required R-values as listed in Table R402.1.1. However, for insulation material used in layers, the intent is for the R-values of layered cavity insulation to be summed to meet the required cavity insulation R-value and the R-values of layered continuous insulation to be summed to meet the continuous insulation R-value.

Cost Impact: The code change proposal will not increase the cost of construction.

RE43-13

Public Hearing:	Committee:	AS	AM	D
	Assembly:	ASF	AMF	DF

R402.1.2-EC-WOESTMAN

RE44 – 13
Table R402.1.3 (IRC Table N1102.1.3)

Proponent: Shirley Ellis, Energy Systems Laboratory, Texas A&M Engineering Experiment Station, Texas A&M University System (shirleyellis@tamu.edu)

Revise as follows:

TABLE R402.1.3 (N1102.1.3)
EQUIVALENT *U*-FACTORS[a]

CLIMATE ZONE	FENESTRATION *U*-FACTOR	SKYLIGHT *U*-FACTOR	CEILING *U*-FACTOR	FRAME WALL *U*-FACTOR	MASS WALL *U*-FACTOR[b]	FLOOR *U*-FACTOR	BASEMENT WALL *U*-FACTOR	CRAWL SPACE WALL *U*-FACTOR
1	0.50	0.75	0.035	0.082	0.197	0.064	0.360	0.477
2	0.40	0.65	0.030	0.082	0.165	0.064	0.360	0.477
3	0.35	0.55	0.030	~~0.057~~ 0.060	0.098	0.047	0.091[c]	0.136
4 except Marine	0.35	0.55	0.026	~~0.057~~ 0.060	0.098	0.047	0.059	0.065
5 and Marine 4	0.32	0.55	0.026	0.057	0.082	0.033	0.050	0.055
6	0.32	0.55	0.026	0.048	0.060	0.033	0.050	0.055
7 and 8	0.32	0.55	0.026	0.048	0.057	0.028	0.050	0.055

(Portions of Table not shown remain unchanged)

Reason: This code change proposal is intended to correct the assumptions behind the wood-frame wall U-factors embedded in Table R402.1.3 of the IECC. The misrepresent the true performance of homes and, as such, over-estimate the energy efficiency of a typical R13 wood wall assembly when the Total UA or Simulated Performance path is used to demonstrate compliance to the IECC.

The wood wall U-factor values in Table R402.1.3 are currently based on a wall system that assumes the use of 5/8" plywood sheathing, which is well in excess of the minimum (3/8" thick) structural wood panel wall bracing in the International Residential Code (IRC). The U-factor value for the R13+5 wood wall system also assumes that a full double layer of 5/8" plywood sheathing and 1" continuous insulation is used. Neither the use of 5/8" structural panel wall sheathing or double sheathing with structural panels and continuous insulation in single family houses is commonly practiced or required by code.

According to the NAHB Research Center's 2011 Builders Survey, 5/8" or thicker wood structural panel wall sheathing makes up only 10% of the structural wood wall sheathing used in single-family residential construction. While 68% of residential single family wall area used wood structural panel sheathing was 7/16" thick or less.

There are several code options for braced wall segments that can incorporate continuous insulation over the top without adding a layer of structural wood panels. There are also options to use structural panels in combination with continuous insulation in between the structural segments. The code must be based on minimum systems that meet the provisions of the code in order to establish requirements that are fair to all products and assemblies. That minimum system would be a single layer of sheathing using continuous insulation.

Cost Impact: The code change proposal will not increase the cost of construction.

RE44-13

Public Hearing:	Committee:	AS	AM	D
	Assembly:	ASF	AMF	DF

R402.1.3T #1-EC-ELLIS

RE45 – 13
Table R402.1.3 (IRC N1102.1.3)

Proponent: Shirley Ellis, Energy Systems Laboratory, Texas A&M Engineering Experiment Station, Texas A&M University System (shirleyellis@tamu.edu)

Revise as follows:

TABLE R402.1.3 (N1102.1.3)
EQUIVALENT *U*-FACTORS[a]

CLIMATE ZONE	FENESTRATION *U*-FACTOR	SKYLIGHT *U*-FACTOR	CEILING *U*-FACTOR	FRAME WALL *U*-FACTOR	MASS WALL *U*-FACTOR[b]	FLOOR *U*-FACTOR	BASEMENT WALL *U*-FACTOR	CRAWL SPACE WALL *U*-FACTOR
1	0.50	0.75	0.035	~~0.082~~ 0.084	0.197	0.064	0.360	0.477
2	0.40	0.65	0.030	~~0.082~~ 0.084	0.165	0.064	0.360	0.477
3	0.35	0.55	0.030	0.057 0.060	0.098	0.047	0.091[c]	0.136
4 except Marine	0.35	0.55	0.026	0.057 0.060	0.098	0.047	0.059	0.065
5 and Marine 4	0.32	0.55	0.026	0.057	0.082	0.033	0.050	0.055
6	0.32	0.55	0.026	0.048	0.060	0.033	0.050	0.055
7 and 8	0.32	0.55	0.026	0.048	0.057	0.028	0.050	0.055

(Portions of Table not shown remain unchanged)

Reason: This code change proposal is intended to correct the assumptions behind the wood-frame wall U-factors embedded in Table R402.1.3 of the IECC. The misrepresent the true performance of homes and, as such, over-estimate the energy efficiency of a typical R13 wood wall assembly when the Total UA or Simulated Performance path is used to demonstrate compliance to the IECC.

The wood wall U-factor values in Table R402.1.3 are currently based on a wall system that assumes the use of 5/8" plywood sheathing, which is well in excess of the minimum (3/8" thick) structural wood panel wall bracing in the International Residential Code (IRC).

While 3/8" is the minimum wood structural panel wall bracing thickness allowed in the IRC, the most common structural panel thickness used in the United States is 7/16-inch. According to the 2011 Builders Survey, 68% of residential single family wall area used wood structural panel sheathing that was 7/16" thick or less. Therefore, it is reasonable to use an R-value for structural wood panels of 0.62R in the calculation for the U-value for climate zones 1 and 2. According to Table 2, that U-factor is 0.084.

Cost Impact: The code change proposal will not increase the cost of construction.

RE45-13

Public Hearing:	Committee:	AS	AM	D
	Assembly:	ASF	AMF	DF

R402.1.3T #2-EC-ELLIS

RE46 – 13
Table R402.1.3 (IRC Table N1102.1.3)

Proponent: Tom Kositzky, representing Coalition for Fair Energy Codes

Revise as follows:

TABLE R402.1.3 (N1102.1.3)
EQUIVALENT *U*-FACTORS[a]

CLIMATE ZONE	FENESTRATION *U*-FACTOR	SKYLIGHT *U*-FACTOR	CEILING *U*-FACTOR	FRAME WALL *U*-FACTOR	MASS WALL *U*-FACTOR[b]	FLOOR *U*-FACTOR	BASEMENT WALL *U*-FACTOR	CRAWL SPACE WALL *U*-FACTOR
1	0.50	0.75	0.035	0.082	0.197	0.064	0.360	0.477
2	0.40	0.65	0.030	0.082	0.165	0.064	0.360	0.477
3	0.35	0.55	0.030	~~0.057~~ 0.060	0.098	0.047	0.091[c]	0.136
4 except Marine	0.35	0.55	0.026	~~0.057~~ 0.060	0.098	0.047	0.059	0.065
5 and Marine 4	0.32	0.55	0.026	~~0.057~~ 0.060	0.082	0.033	0.050	0.055
6	0.32	0.55	0.026	0.048	0.060	0.033	0.050	0.055
7 and 8	0.32	0.55	0.026	0.048	0.057	0.028	0.050	0.055

(Portions of Table not shown remain unchanged)

Reason: This code change proposal is intended to bring transparency and accuracy to the code by using more realistic assumptions to generate Climate Zones 3-5 wood frame wall *U*-factors in Table R402.1.3. The *REScheck*™ assumptions result in *U*-factors that misrepresent the true energy performance of wood walls and, as such, over-estimate the energy efficiency of a typical R20 and R13+5 wood wall assemblies when the assembly *U*-factor, Total UA alternative or Simulated Performance alternative is used to demonstrate compliance.

This proposal corrects two *REScheck*™ assumptions which were used to generate the wood wall *U*-factors in Table R402.1.3.

1. It was assumed that 5/8-inch plywood wall sheathing is used.
   (This assumption is in excess of the minimum required, 3/8-inch thick, wood structural panel wall bracing that is required in the IRC.)
2. The assumption that a double layer of wall sheathing is used for R13+5 assemblies.
   (A layer of R5 continuous insulation with an additional layer of continuous 5/8-inch plywood wall sheathing is assumed.)

Both of these assumptions are not based upon common practice nor are they required by the IRC. In order to establish baseline requirements that are fair to all products and systems, the code should be based upon the minimum performing assemblies that meet the provisions of the code. The minimum performing system in IECC Table R402.1.1 is found in footnote h. It allows continuous insulating sheathing to be used in combination with intermittent structural wall bracing (a.k.a., corner bracing) and results in a *U*-factor of 0.064 as shown below in Table 3.

Recognizing the strong opposition regarding the use of this common prescriptive wall assembly (footnote h) as a basis for generating *U*-factors, we propose basing the Climate Zone 3-5 continuous insulating sheathing *U*-factor on an assembly that uses let-in-bracing (per IRC Table R602.10.4) or metal strap bracing to provide lateral support. The resulting *U*-factor of 0.060 correlates to the *U*-factor for an R20 wall when code minimum 3/8-inch wood structural panel sheathing is used in lieu of 5/8-inch plywood. (See Table 2 below.)

A *U*-factor of 0.060 aligns more closely with common construction practices and would be a more reasonable value for wood frame walls in Climate Zones 3-5.

We ask the support of the committee for this proposal.

Table 1 shows the RES*check*™ component assumptions which were used to determine the prescriptive *U*-factors in Table R402.1.3 of the IECC[1, 2]. The cells representing the 5/8-inch plywood and double layer wall sheathing assumptions are shaded.

Table 2 shows the component assumptions for the *U*-factor being proposed.

Table 3 represents a code-compliant and common construction approach which is provided for reference.

Table 1. U-Factor Calculations for Climate Zones 3-5, Wood Framed Walls
(Current U-Factor Basis)

Wall Thermal Resistance by Component	2x4 Wall - R13+5			2x6 Wall - R20		
	R-Value Studs	R-Value Cavity	Assembly Value	R-Value Studs	R-Value Cavity	Assembly Value
Outside Air Film	0.25			0.25		
Siding	0.59			0.59		
Continuous Insulation	5			0		
Wood Structural Panel Sheathing (5/8”)	0.83			0.83		
Stud/Cavity Insulation	4.375	13		6.875	20	
1/2" Drywall	0.45			0.45		
Inside Air Film	0.68			0.68		
Studs at 16" o.c.	25%	75%		25%	75%	
Total Wall R-Values	12.18	20.80	**17.67**	9.68	22.80	**17.03**
Total Wall U-Factors	0.082	0.048	**0.0566**	0.103	0.044	**0.0587**

Table 2. U-Factor Calculations for Climate Zones 3-5, Wood Framed Walls (Common Basis)

Wall Thermal Resistance by Component	2x4 Wall - R13+5 Corrected			2x6 Wall - R20 Corrected		
	R-Value Studs	R-Value Cavity	Assembly Value	R-Value Studs	R-Value Cavity	Assembly Value
Outside Air Film	0.25			0.25		
Siding	0.59			0.59		
Continuous Insulation	5			0		
Wood Structural Panel Sheathing (3/8”)	0			0.47		
Stud/Cavity Insulation	4.375	13		6.875	20	
1/2" Drywall	0.45			0.45		
Inside Air Film	0.68			0.68		
Studs at 16" o.c.	25%	75%		25%	75%	
Total Wall R-Values	11.35	19.97	**16.78**	9.32	22.44	**16.59**
Total Wall U-Factors	0.088	0.050	**0.0596**	0.107	0.045	**0.0603**

Table 3. U-Factor Calculations for Climate Zones 3-5, 2x4 Wood Framed Walls (Using Table 402.1.1, Footnote h as Basis)

Wall Thermal Resistance by Component	2x4 Wall - R13+5 (60 percent of wall area with specified continuous insulation level and no structural bracing)			2x4 Wall - R13+5 (40 percent of wall area with reduced continuous insulation level + structural sheathing)			Total Assembly Value
	R-Value Studs	R-Value Cavity	60% of wall area	R-Value Studs	R-Value Cavity	40% of wall area	
Outside Air Film	0.25			0.25			
Siding	0.59			0.59			
Continuous Insulation	5			2			
Intermittent Structural Wall Bracing (3/8")	0			0.47			
Stud/Cavity Insulation	4.375	13		4.375	13		
1/2" Drywall	0.45			0.45			
Inside Air Film	0.68			0.68			
Studs at 16" o.c.	25%	75%		25%	75%		
Total Wall R-Values	11.35	19.97	**16.78**	8.82	17.44	**14.01**	**15.6733**
Total Wall U-Factors	0.088	0.050	**0.0596**	0.113	0.057	**0.0714**	**0.0638**

References:

[1]U.S. Department of Energy, Washington D.C. 2011 Methodology for Developing the RES*check*™ Software through Version 4.4.3. http://www.energycodes.gov/methodology-developing-rescheck-software-through-version-443

[2]See ICC-ES, ESR-2586, Table 4. www.apawood.org/docs/2013/ICC_ESR_2586.pdf

Cost Impact: The code change proposal will not increase the cost of construction.

RE46-13

Public Hearing:	Committee:	AS	AM	D
	Assembly:	ASF	AMF	DF

R402.1.3T #1-EC-KOSITZKY

RE47 – 13
Table R402.1.3 (IRC N1102.1.3)

Proponent: Tom Kositzky, representing Coalition for Fair Energy Codes

Revise as follows:

TABLE R402.1.3 (N1102.1.3)
EQUIVALENT *U*-FACTORS[a]

CLIMATE ZONE	FENESTRATION *U*-FACTOR	SKYLIGHT *U*-FACTOR	CEILING *U*-FACTOR	FRAME WALL *U*-FACTOR	MASS WALL *U*-FACTOR[b]	FLOOR *U*-FACTOR	BASEMENT WALL *U*-FACTOR	CRAWL SPACE WALL *U*-FACTOR
1	0.50	0.75	0.035	0.082	0.197	0.064	0.360	0.477
2	0.40	0.65	0.030	0.082	0.165	0.064	0.360	0.477
3	0.35	0.55	0.030	0.057 0.060	0.098	0.047	0.091[c]	0.136
4 except Marine	0.35	0.55	0.026	0.057 0.060	0.098	0.047	0.059	0.065
5 and Marine 4	0.32	0.55	0.026	0.057	0.082	0.033	0.050	0.055
6	0.32	0.55	0.026	~~0.048~~ 0.046	0.060	0.033	0.050	0.055
7 and 8	0.32	0.55	0.026	~~0.048~~ 0.046	0.057	0.028	0.050	0.055

(Portions of Table not shown remain unchanged)

Reason: The purpose of this code change proposal is to bring transparency and accuracy to the code by correcting the wood-frame wall *U*-factors for Climate Zones 6, 7 and 8 in Table R402.1.3. The previous assembly component assumptions resulted in *U*-factors that misrepresent the true energy performance of wood walls and, as such, underestimate the energy efficiency of a typical R20+5 wood wall assembly. Correcting the *U*-factor to 0.046 from 0.048 is more consistent with common construction practices for the corresponding assemblies listed in Table 402.1.1.[1]

Table 402.1.1 lists two prescriptive wood wall assembly options for Climate Zones 6-8, both of which require continuous insulation. In addition to meeting the IECC, these walls must also provide lateral resistance for the house which is typically provided through prescriptive wall bracing or shear walls. There are several structural wall bracing options in Table R602.10.4 of the IRC, two of which are commonly used with continuous insulating sheathing:

1. Let-in-bracing (LIB), and;
2. Intermittent structural sheathing (combined with insulating sheathing installed between the structural sheathing, and a thinner insulating sheathing or insulated siding on top of the structural sheathing, per IECC Table R402.1.1, footnote h).

In order to establish baseline requirements that treat all building products and systems equally, the code should be based on the minimum performing assemblies that meet the provisions of the code. The minimum performing system in IECC Table R402.1.1 is continuous insulating sheathing used in combination with intermittent structural wall bracing (footnote h), which results in a *U*-factor of 0.048 as demonstrated in Tables 2 and 3, below. Recognizing that there is opposition to using footnote h as a baseline assembly, we propose basing the *U*-factors for Climate Zones 6-8 on the continuous insulating sheathing wall assemblies that use let-in-bracing that requires no structural sheathing. This proposal results in a *U*-factor of 0.046, which both assemblies are shown to meet, per Table 1.

We ask the support of the committee for this proposal.

Table 1. U-Factor Calculations for Climate Zones 6-8 Wood Framed Walls

Wall Thermal Resistance by Component	2x4 Wall - R13+10			2x6 Wall - R20+5		
	R-Value Studs	R-Value Cavity	Assembly Value	R-Value Studs	R-Value Cavity	Assembly Value
Outside Air Film	0.25			0.25		
Siding	0.59			0.59		
Continuous Insulation	10			5		
Wood Structural Panel Sheathing	0			0		
Stud/Cavity Insulation	4.375	13		6.875	20	
1/2" Drywall	0.45			0.45		
Inside Air Film	0.68			0.68		
Studs at 16" o.c.	25%	75%		25%	75%	
Total Wall R-Values	16.35	24.97	**22.06**	13.85	26.97	**21.80**
Total Wall U-Factors	0.061	0.040	**0.0453**	0.072	0.037	**0.0459**

Table 2. U-Factor Calculations for Climate Zone 6-8, 2x6 Wood Framed Wall (Using Table 402.1.1, Footnote h as Basis)

Wall Thermal Resistance by Component	2x6 Wall - R20+5 (60 percent of wall area with specified continuous insulation level and no structural bracing)			2x6 Wall - R20+5 (40 percent of wall area with reduced continuous insulation level + structural sheathing)			Total Assembly Value
	R-Value Studs	R-Value Cavity	60% of wall area	R-Value Studs	R-Value Cavity	40% of wall area	
Outside Air Film	0.25			0.25			
Siding	0.59			0.59			
Continuous Insulation	5			2			
Intermittent Structural Wall Bracing (3/8")	0			0.47			
Stud/Cavity Insulation	6.875	20		6.875	20		
1/2" Drywall	0.45			0.45			
Inside Air Film	0.68			0.68			
Studs at 16" o.c.	25%	75%		25%	75%		
Total Wall R-Values	13.85	26.97	**21.80**	11.32	24.44	**18.95**	**20.66**
Total Wall U-Factors	0.072	0.037	**0.0459**	0.087	0.041	**0.0528**	**0.0484**

Table 3. U-Factor Calculations for Climate Zone 6-8, 2x4 Wood Framed Walls (Using Table 402.1.1, Footnote h as Basis)

Wall Thermal Resistance by Component	2x4 Wall - R13+10 (60 percent of wall area with specified continuous insulation level and no structural bracing)			2x4 Wall - R13+10 (40 percent of wall area with reduced continuous insulation level + structural sheathing)			Total Assembly Value
	R-Value Studs	R-Value Cavity	60% of wall area	R-Value Studs	R-Value Cavity	40% of wall area	
Outside Air Film	0.25			0.25			
Siding	0.59			0.59			
Continuous Insulation	10			7			
Intermittent Structural Wall Bracing (3/8")	0			0.47			
Stud/Cavity Insulation	4.375	13		4.375	13		
1/2" Drywall	0.45			0.45			
Inside Air Film	0.68			0.68			
Studs at 16" o.c.	25%	75%		25%	75%		
Total Wall R-Values	16.35	24.97	**22.06**	13.82	22.44	**19.41**	**21.0001**
Total Wall U-Factors	0.061	0.040	**0.0453**	0.072	0.045	**0.0515**	**0.0476**

References:[1] See ICC-ES, ESR-2586, Table 4. www.apawood.org/docs/2013/ICC_ESR_2586.pdf

Cost Impact: The code change proposal will not increase the cost of construction.

RE47-13

Public Hearing:	Committee:	AS	AM	D
	Assembly:	ASF	AMF	DF

R402.1.3T #2-EC-KOSITZKY

RE48 – 13
Table R402.1.3 (IRC N1102.1.3)

Proponent: Tom Kositzky, representing Coalition for Fair Energy Codes

Revise as follows:

TABLE R402.1.3 (N1102.1.3)
EQUIVALENT *U*-FACTORS[a]

CLIMATE ZONE	FENESTRATION *U*-FACTOR	SKYLIGHT *U*-FACTOR	CEILING *U*-FACTOR	FRAME WALL *U*-FACTOR	MASS WALL *U*-FACTOR[b]	FLOOR *U*-FACTOR	BASEMENT WALL *U*-FACTOR	CRAWL SPACE WALL *U*-FACTOR
1	0.50	0.75	0.035	~~0.082~~ 0.085	0.197	0.064	0.360	0.477
2	0.40	0.65	0.030	~~0.082~~ 0.085	0.165	0.064	0.360	0.477
3	0.35	0.55	0.030	0.057	0.098	0.047	0.091[c]	0.136
4 except Marine	0.35	0.55	0.026	0.057	0.098	0.047	0.059	0.065
5 and Marine 4	0.32	0.55	0.026	0.057	0.082	0.033	0.050	0.055
6	0.32	0.55	0.026	0.048	0.060	0.033	0.050	0.055
7 and 8	0.32	0.55	0.026	0.048	0.057	0.028	0.050	0.055

(Portions of Table not shown remain unchanged)

Reason: This code change proposal is intended to bring transparency and accuracy to the code by using more realistic assumptions to generate the Climate Zone 1 and 2 wood-frame wall *U*-factors in Table R402.1.3. The previous assumptions resulted in *U*-factors that misrepresent the true energy performance of wood walls and, as such, overestimate the energy efficiency of a typical R13 wood wall assembly when the assembly *U*-factor alternative, the total UA alternative or Simulated Performance alternative is used to demonstrate compliance. The wood wall *U*-factors in Table R402.1.3 are currently based on an assembly that assumes the use of 5/8-inch plywood sheathing, which is well in excess of the minimum 3/8-inch thick structural wood panel wall bracing in the IRC.

Table 1 incorporates the RES*check*™ assumptions which were used to determine the prescriptive *U*-factors in Table R402.1.3 of the IECC[1,2] in the left hand columns of the table. This base calculation assumes that 5/8-inch thick plywood is used as the sheathing material, resulting in the current 0.082 *U*-factor. The proposed component *R*-value basis in the right-hand columns in Table 1 uses the same RES*check*™ assumptions but incorporates the *R*-value for 3/8-inch wood structural panel sheathing, resulting in a *U*-factor of 0.085.

Adjusting the Climate Zone 1-2 *U*-factors in Table R402.1.3 to 0.085 will more accurately reflect the energy efficiency of an R13 wood wall assembly when the Total UA or Simulated Performance alternatives are used to demonstrate compliance.

We ask the support of the committee for this proposal.

Table 1. U-Factor Calculations for Climate Zones 1-2 Wood Framed Walls

Wall Thermal Resistance by Component	Current Component R-Value Basis			Proposed Component R-Value Basis		
	R-Value Studs	R-Value Cavity	Assembly Value	R-Value Studs	R-Value Cavity	Assembly Value
Outside Air Film	0.25			0.25		
Siding	0.59			0.59		
Continuous Insulation	0			0		
Wood Structural Panel Sheathing	0.83		(5/8")	0.47		(3/8")
Stud/Cavity Insulation	4.38	13		4.38	13	
1/2" Drywall	0.45			0.45		
Inside Air Film	0.68			0.68		
Studs at 16" o.c.	25%	75%		25%	75%	
Total Wall R-Values	7.18	15.80	**12.15**	6.82	15.44	**11.73**
Total Wall U-Factors	0.139	0.063	**0.0823**	0.147	0.065	**0.0853**

References:

[1]U.S. Department of Energy, Washington D.C. 2011 Methodology for Developing the RES*check*™ Software through Version 4.4.3. http://www.energycodes.gov/methodology-developing-rescheck-software-through-version-443

[2]See ICC-ES, ESR-2586, Table 4. www.apawood.org/docs/2013/ICC_ESR_2586.pdf

Cost Impact: The code change proposal will not increase the cost of construction.

RE48-13

Public Hearing:	Committee:	AS	AM	D
	Assembly:	ASF	AMF	DF

R402.1.3T #3-EC-KOSITZKY

RE49 – 13
Table R402.1.3 (IRC Table N1102.1.3)

Proponent: Eric Makela, Britt/Makela Group, Inc., representing Northwest Energy Codes Group (Eric@BrittMakela.com)

Revise as follows:

TABLE R402.1.3 (N1102.1.3)
EQUIVALENT *U*-FACTORS[a]

CLIMATE ZONE	FENESTRATION *U*-FACTOR	SKYLIGHT *U*-FACTOR	CEILING *U*-FACTOR	FRAME WALL *U*-FACTOR	MASS WALL *U*-FACTOR[b]	FLOOR *U*-FACTOR	BASEMENT WALL *U*-FACTOR	CRAWL SPACE WALL *U*-FACTOR
1	0.50	0.75	0.035	0.082	0.197	0.064	0.360	0.477
2	0.40	0.65	0.030	0.082	0.165	0.064	0.360	0.477
3	0.35	0.55	0.030	0.057 0.060	0.098	0.047	0.091[c]	0.136
4 except Marine	0.35	0.55	0.026	0.057 0.060	0.098	0.047	0.059	0.065
5 and Marine 4	0.32	0.55	0.026	0.057	0.082	0.033	0.050	0.055
6	0.32	0.55	0.026	~~0.048~~ 0.044	0.060	0.033	0.050	0.055
7 and 8	0.32	0.55	0.026	~~0.048~~ 0.044	0.057	0.028	0.050	0.055

a. Nonfenestration *U*-factors shall be obtained from measurement, calculation or an approved source.
b. When more than half the insulation is on the interior, the mass wall *U*-factors shall be a maximum of 0.17 in Climate Zone 1, 0.14 in Climate Zone 2, 0.12 in Climate Zone 3, 0.087 in Climate Zone 4 except Marine, 0.065 in Climate Zone 5 and Marine 4, and 0.057 in Climate Zones 6 through 8.
c. Basement wall *U*-factor of 0.360 in warm-humid locations as defined by Figure R301.1 and Table R301.1.

Reason: The wood framed wall U-factors are all generated using the methodology embedded in the US DOE REScheck software. All of the U-factors assume that structural sheathing is installed over 100% of the wall system with continuous insulation covering the structural sheathing. The 0.048 U-factor was calculated assuming no structural sheathing installed under the continuous insulation. Correcting the U-factor would provide consistency in how the values are calculated.

Cost Impact: The code change proposal will not increase the cost of construction.

RE49-13

Public Hearing:	Committee:	AS	AM	D
	Assembly:	ASF	AMF	DF

R402.1.3T-EC-MAKELA

RE50 – 13
Table R402.1.3 (IRC Table N1102.1.3)

Proponent: Don Surrena, CBO, representing National Association of Home Builders (NAHB) (dsurrena@nahb.org)

Revise as follows:

TABLE R402.1.3 (N1102.1.3)
EQUIVALENT *U*-FACTORS[a]

CLIMATE ZONE	FENESTRATION *U*-FACTOR	SKYLIGHT *U*-FACTOR	CEILING *U*-FACTOR	FRAME WALL *U*-FACTOR	MASS WALL *U*-FACTOR[b]	FLOOR *U*-FACTOR	BASEMENT WALL *U*-FACTOR	CRAWL SPACE WALL *U*-FACTOR
1	0.50	0.75	0.035	~~0.082~~ 0.084	0.197	0.064	0.360	0.477
2	0.40	0.65	0.030	~~0.082~~ 0.084	0.165	0.064	0.360	0.477
3	0.35	0.55	0.030	~~0.057~~ 0.060	0.098	0.047	0.091[c]	0.136
4 except Marine	0.35	0.55	0.026	~~0.057~~ 0.060	0.098	0.047	0.059	0.065
5 and Marine 4	0.32	0.55	0.026	~~0.057~~ 0.060	0.082	0.033	0.050	0.055
6	0.32	0.55	0.026	~~0.048~~ 0.045	0.060	0.033	0.050	0.055
7 and 8	0.32	0.55	0.026	~~0.048~~ 0.045	0.057	0.028	0.050	0.055

(Portions of table not shown remain unchanged)

Reason: The intent of these changes is not to alter the stringency of the code, but rectify the conversion from R-Value to U-Factor. Currently the R-Values and equivalent U-Factors do not match when applying a consistent calculation method.

It is important that the U-Factors and R-Values do match when small alterations are being made to the wall assemblies selected in the R-Value table. For example, a builder does not want to install R-20 as suggested in the R-Value table. Instead, the builder's preferred wall is R-15+R3.8c.i. Although the R-15+R3.8c.i. wall is thermally better than the R-20 wall, it does not meet the requirements of the Equivalent U-Factor table.

Below are a series of calculations which justify the proposed changes to the Frame Wall U-Factor values:

Climate Zone 1 and 2 Wall U-Factor Calculation Spreadsheet

Wall Thermal Resistance by Component	2x4 Wall R-13 Batt		
	R-Value Studs	R-Value Cavity	Assembly Value
Wall - Outside Winter Air Film[A]	0.17		
Siding - Vinyl[A]	0.62		
Continuous Insulation	0		
OSB - 7/16"[A]	0.62		
SPF Stud/Cavity Insulation	4.375	13	
1/2" Drywall [A]	0.45		
Inside Air Film[A]	0.68		
Studs at 16" o.c. [A]	25%	75%	
Total Wall R-Values	6.92	15.54	**11.85**
Total Wall U-Values	0.145	0.064	**0.084**
[A]2009 ASHRAE Handbook of Fundamentals			

Climate Zones 3-5 Wall U-Factor Calculation Spreadsheet

Wall Thermal Resistance by Component	2x4 Wall R-13+R5			2x6 Wall R-20		
	R-Value Studs	R-Value Cavity	Assembly U-Factor	R-Value Studs	R-Value Cavity	Assembly U-Factor
Wall - Outside Winter Air Film[A]	0.17			0.17		
Siding - Vinyl[A]	0.62			0.62		
Continuous Insulation	5			0		
OSB - 7/16"[A]	0.62			0.62		
SPF Stud/Cavity Insulation	4.375	13		6.875	20	
1/2" Drywall [A]	0.45			0.45		
Inside Air Film[A]	0.68			0.68		
Studs at 16" o.c. [A]	25%	75%		25%	75%	
Total Wall R-Values	11.92	20.54	**17.39**	9.42	22.54	**16.71**
Total Wall U-Factor	0.084	0.049	**0.057**	0.106	0.044	**0.060**
[A]2009 ASHRAE Handbook of Fundamentals						

Climate Zones 6-8 Wall U-Factor Calculation Spreadsheet

Wall Thermal Resistance by Component	2x4 Wall R-13+R-10 c.i.			2x6 Wall R-20+R-5 c.i.		
	R-Value Studs	R-Value Cavity	Assembly Value	R-Value Studs	R-Value Cavity	Assembly Value
Wall - Outside Winter Air Film[A]	0.17			0.17		
Siding - Vinyl[A]	0.62			0.62		
Continuous Insulation	10			5		
OSB - 7/16"[A]	0.62			0.62		
SPF Stud/Cavity Insulation	4.375	13		6.875	20	
1/2" Drywall [A]	0.45			0.45		
Inside Air Film[A]	0.68			0.68		
Studs at 16" o.c. [A]	25%	75%		25%	75%	
Total Wall R-Values	16.92	25.54	**22.65**	14.42	27.54	**22.43**
Total Wall U-Values	0.059	0.039	**0.044**	0.069	0.036	**0.045**
[A]2009 ASHRAE Handbook of Fundamentals						

Referenced Standards: None

Cost Impact: The code change proposal will not increase the cost of construction.

RE50-13

Public Hearing:	Committee:	AS	AM	D
	Assembly:	ASF	AMF	DF

R402.1.3T-EC-SURRENA

RE51 – 13

R402.1.5 (NEW) (IRC N1102.1.5 (NEW)), Table R402.1.5 (NEW) (IRC 1102.1.5 (NEW)), Table 402.1.6 (NEW) (IRC Table N1102.1.6 (NEW))

Proponent: Brian Dean, Energy Efficient Codes Coalition; Garrett Stone, Brickfield Burchette Ritts & Stone, PC; Jeff Harris, Alliance to Save Energy; Harry Misuriello, American Council for an Energy-Efficient Economy; and Bill Prindle, Energy Efficient Codes Coalition

Add new text as follows:

R402.1.5 (N1102.1.5) Calculating opaque envelope component *U-factors*. Where determining the *U-factor* of an opaque assembly as part of Section R402.1.3, R402.1.4, or R405.5.2, Table R402.1.5 shall be used to calculate the *U-factor* using a series-parallel path calculation. Where actual insulation and framing fractions have been calculated for the proposed design, they shall be used; otherwise the default insulation and framing fractions in Table R402.1.5 shall be used. Where required by the *code official*:

1. Actual *U-factors*, insulation and framing fractions shall be calculated and documented in a written report; and
2. The calculated and documented values shall be inspected, reviewed, and certified by an independent party *approved* by the *code official.*

TABLE R402.1.5 (N1102.1.5)
COMPONENT *R-VALUE* AND INSULATION AND FRAMING FRACTIONS BY ASSEMBLY TYPE

	Interior Air Film	Interior Finish Layer	Cavity Insulation Layer	Cavity Insulation Fraction	Cavity Framing Layer	Framing Fraction	Continuous Insulation Layer[c]	Structural Sheathing Layer[c]	Siding Layer	Exterior Air Film
	R-Value	*R-Value*	*R-Value*	Percent	*R-Value*	Percent	*R-Value*	*R-Value*	*R-Value*	*R-Value*
Wood Frame Ceiling	0.61	0.45	as specified[a]	93	R-1.25 per inch[b]	7	0 or as specified	-	-	0.61
Wood Frame Wall	0.68	0.45	as specified	75	R-1.25 per inch[b]	25	0 or as specified	0.62	0.59	0.25
Steel Frame Wall	0.68	0.45	as specified	-	-	-	0 or as specified	0.62	0.59	0.25
Mass Wall	0.68	0.45	as specified	-	-	-	0 or as specified	0.62	0.59	0.25
Mass Wall with Frame	0.68	0.45	as specified	75	R-1.25 per inch[b]	25	0 or as specified	0.62	0.59	0.25
Wood Frame Floor	0.92	1.23 + 0.94	as specified	90	R-1.25 per inch[b]	10	0 or as specified	-	-	0.92
Basement Wall	0.68	0.45	as specified	-	-	-	0 or as specified	-	-	0.25
Crawlspace Wall	0.68	0.45	as specified	-	-	-	0 or as specified	-	-	0.25

a. Where calculating the equivalent *U-factor* for the standard reference design, the depth of the insulation shall be calculated to account for limited depth at the edge of the ceiling based on a standard truss with available depth of 3.86 inches at the edge of the ceiling and a roof slope of 1 foot for every 3 feet across. In the proposed design, the ceiling insulation *U-value* shall be calculated with the actual insulation depths in the proposed design.

b. The depth of the wood framing shall be based on the actual depth of the wood framing. Where calculating the equivalent *U-factor* for the standard reference design, the depth of the wood framing shall be calculated as the cavity insulation *R-value* divided by 4 and then rounded up to the following depths in inches: 3.5 for a 2x4 frame, 5.5 for a 2x6 frame, 7.5 for a 2x8 frame or 9.5 for a 2x10 frame.

c. Where calculating the equivalent *U-factor* for the standard reference design using continuous insulation, 100% of the net wall is assumed to be covered by the insulating sheathing. The proposed design shall be calculated with the actual percentage of continuous insulation and structural sheathing.

d. Where calculating the equivalent *U-factor* of a steel framed assembly using Table R402.1.5, a series path calculation shall be used. The *R-value* of the cavity insulation layer for steel framed assemblies shall be calculated by multiplying the specified cavity insulation *R-value* by the corresponding correction factor located in Table R402.1.6. Where there is no specified cavity insulation, the *R-value* of the cavity/framing layer shall be taken as R-0.8 for 16 inch on center assemblies and R-0.9 for 24 inch on center assemblies.

TABLE R402.1.6 (N1102.1.6)
STEEL FRAMED ASSEMBLIES CAVITY INSULATION CORRECTION FACTORS

Nominal Stud Size	Cavity Insulation *R-Value*	Nominal Framing Spacing	
		16 in. on center	24 in. on center
2x4	11	0.50	0.60
2x4	13	0.46	0.55
2x4	15	0.43	0.52
2x6	19	0.37	0.45
2x6	20	0.36	0.44
2x6	21	0.35	0.43
2x8	25	0.31	0.38

Reason: The purpose of the code change is to clarify the code by standardizing the method used to calculate the *R-values* and *U-factors* in opaque envelope assemblies. There is currently no method outlined in the *IECC* or *IRC* that would specify the assumptions for calculating the efficiencies of opaque assemblies in compliance software. This proposal does not change the prescriptive insulation R-value or U-factor requirements, but it standardizes crucial assumptions such as framing fractions that must be used in energy calculations.

The *IECC* currently allows the use of energy modeling tools to show compliance, but the guidance is vague. Section R402.1.4 Total UA alternative requires simply that the "UA calculation shall be done using a method consistent with the ASHRAE *Handbook of Fundamentals* and shall include the thermal bridging effects of framing materials."
Some stakeholders have used the lack of specificity in the code to argue for a "least common denominator" approach to code compliance, in which worst-case assumptions would be used as the baseline in Total UA or performance path calculations. That approach could lead to highly inconsistent results and significant losses of energy efficiency, and it runs counter to the purpose of regulating building energy efficiency in the first place. To be clear, this proposal does not intend to alter the simple prescriptive path, nor does it intend to create multiple prescriptive alternatives. Rather, it specifies the basic assumptions that must be used whenever the Total UA alternative or simulated performance alternative is used and standardizes this approach for all users.

The proposal above offers an objective, uniform set of default assumptions to be used in energy modeling, based on standard and advanced construction techniques. The proposal primarily uses values based on ASHRAE, supplemented by the approaches used in US DOE's REScheck compliance software, the HERS program, and the Washington State Energy Code. The proposal has also been carefully refined based on comments received during previous code cycles to similar proposals.

Cost Impact: The code change proposal will not increase the cost of construction.

RE51-13

Public Hearing:	Committee:	AS	AM	D
	Assembly:	ASF	AMF	DF

R402.1.5 (NEW)-EC-DEAN-HARRIS-MISURIELLO-PRINDLE-STONE

RE52 – 13
R402.2.1 (IRC N1102.2.1), R402.2.2 (IRC N1102.2.2)

Proponent: Brian Dean, Energy Efficient Codes Coalition; Garrett Stone, Brickfield Burchette Ritts & Stone, PC; Jeff Harris, Alliance to Save Energy; Harry Misuriello, American Council for an Energy-Efficient Economy; and Bill Prindle, Energy Efficient Codes Coalition

Revise as follows:

R402.2.1 (N1102.2.1) Ceilings with attic spaces. ~~When Section R402.1.1 would require R-38 in the ceiling, R-30 shall be deemed to satisfy the requirement for R-38 wherever~~ Where the full height ~~of uncompressed R-30 insulation extends~~ over the wall top plate at the eaves does not allow sufficient space for the required insulation in Section R402.1.1.~~. Similarly, R-38 shall be deemed to satisfy the requirement for R-49 wherever the full height of uncompressed R-38 insulation extends over the wall top plate at the eaves. This reduction shall not apply to the U-factor alternative approach in Section R402.1.3 and~~ the total UA alternative in Section R402.1.4 shall be used.

R402.2.2 (N1102.2.2) Ceilings without attic spaces. Where ~~Section R402.1.1 would require insulation levels above R-30 and~~ the design of the roof/ceiling assembly does not allow sufficient space for the required insulation in Section R402.1.1, ~~the minimum required insulation for such roof/ceiling assemblies shall be R-30. This reduction of insulation from the requirements of Section R402.1.1 shall be limited to 500 square feet (46 m2) or 20 percent of the total insulated ceiling area, whichever is less. This reduction shall not apply to the U-factor alternative approach in Section R402.1.3 and~~ the total UA alternative in Section R402.1.4 shall be used.

Reason: The purpose of this code change is to improve the efficiency of buildings by removing exceptions to the prescriptive ceiling R-value requirements. The 2012 IECC carves out an exception to the ceiling R-value requirements (in Section R402.2.1 for ceilings with attic spaces and Section R402.2.2 for ceilings without attic spaces) for cases (where there is insufficient space in the ceiling design to install the full amount of required insulation. Although this exception reduces the efficiency of ceilings, there is no corresponding increase of efficiency elsewhere in the building.

The proposal above eliminates the exception in each section because it is unnecessary. Where ceiling space is inadequate to install sufficient insulation, the builder or design professional using the prescriptive approach should use the Total UA analysis (or may opt for the Simulated Performance Alternative) to make up for the efficiency loss elsewhere in the thermal envelope or overall performance of the building. There is no valid reason to continue to give a free pass to buildings designed with insufficient space for adequate ceiling insulation.

Cost Impact: The code change proposal will increase the cost of construction.

RE52-13

Public Hearing:	Committee:	AS	AM	D
	Assembly:	ASF	AMF	DF

R402.2.1-EC-DEAN-HARRIS-MISURIELLO-PRINDLE-STONE

RE53 – 13
R402.2.1 (IRC N1102.2.1)

Proponent: Ellen Eggerton, representing Virginia Building and Code Officials Association

Revise as follows:

R402.2.1 (N1102.2.1) Ceilings with attic spaces. ~~When~~ Where Section R402.1.1 would require R38 in the ceiling, installing R30 over 100 percent of the ceiling area requiring insulation shall be deemed to satisfy the requirement for R38 whenever the full height of uncompressed R30 insulation extends over the wall top plate at the eaves. Similarly, where Section R402.1.1 would require R49 in the ceiling, installing R38 over 100 percent of the ceiling area requiring insulation shall be deemed to satisfy the requirement for R49 whenever the full height of uncompressed R38 insulation extends over the wall top plate at the eaves. This reduction shall not apply to the U-factor alternative approach in Section R402.1.3 and the total UA alternative in Section R402.1.4.

Reason: Revised language clarifies how to interpret the "alternative" ceiling insulation requirement. It has come to VBCOA's attention that some code officials have interpreted R402.1.1 as permitting R38 over the wall top plate when using "raised heel" or "energy" trusses, but where R49 could be installed in the interior of the attic where height permits, R49 would in fact be required in those areas. The amendment seeks to clarify that R38 may be used throughout the entire attic, where a full R38 can be installed over the top plate. This approach is consistent with US DOE analysis of heat flow through insulated attics (ca. 1996), accounting for actual insulation thicknesses and framing members.

Cost Impact: Depending on how this particular provision had been previously enforced, impact may be to reduce overall installed insulation materials in attics and associated costs, with no appreciable difference in heat flow rate through this part of the thermal envelope.

RE53-13

Public Hearing:	Committee:	AS	AM	D
	Assembly:	ASF	AMF	DF

R402.2.1-EC-EGGERTON

RE54 – 13
R402.2.1 (IRC N1102.2.1)

Proponent: Robby Schwarz, representing EnergyLogic, Inc. (robby@nrglogic.com)

Revise as follows:

R402.2.1 (N1102.2.1) Ceilings with attic spaces. When Section R402.1.1 would require R-38 in the ceiling, it is required to be continuous across the entire attic at a depth sufficient to achieve an R-38. R-30 shall only be deemed to satisfy the requirement for R-38 wherever the full height of uncompressed R-30 insulation extends over the wall top plate at the eaves and the remainder or the attic continues to be R-38. Similarly, R-38 shall be deemed to satisfy the requirement for R-49 wherever the full height of uncompressed R-38 insulation extends over the wall top plate at the eaves and the remainder or the attic continues to be R-49. This reduction shall not apply to the *U*-factor alternative approach in Section R402.1.3 and the total UA alternative in Section R402.1.4.

Reason: The language of this section has been misinterpreted for years to mean exactly what is being stated in the change. The language change makes it clear that continuous depth of insulation is required across the entire attic to the level that is called out in section R402.1.1. The only exception is over the top plate where insulation depth can be reduced due to the slop of the roof. Efficiency of the home is increased and if a reduction of the R-value is necessary for other building reasons then the other alternative compliance paths are available so tradeoffs can be utilized and code compliance can be achieved.

Cost Impact: The code change proposal will not increase the cost of construction.

RE54-13

Public Hearing:	Committee:	AS	AM	D
	Assembly:	ASF	AMF	DF

R402.2.1-EC-SCHWARZ

RE55 – 13
R402.2.2 (IRC N1102.2.2)

Proponent: Robby Schwarz, representing EnergyLogic, Inc. (robby@nrglogic.com)

Revise as follows:

R402.2.2 (N1102.2.2) Ceilings without attic spaces. Where Section R402.1.1 would require insulation levels above R- 30 and the design of the roof/ceiling assembly does not allow sufficient space for the required insulation, ~~the minimum required insulation for such roof/ceiling assemblies shall be R-30~~ the residential building shall be required to utilize the *U*-factor alternative approach in Section R402.1.3, the total UA alternative in ~~of~~ Section R402.1.4, or Section 405 to demonstrate code compliance. ~~This reduction of insulation from the requirements of Section R402.1.1 shall be limited to 500 square feet (46 m2) or 20 percent of the total insulated ceiling area, whichever is less. This reduction shall not apply to the *U*-factor alternative approach in Section R402.1.3 and the total UA alternative in Section R402.1.4.~~

Reason: The R-values have been established to achieve a specific level of quantifiable energy performance. If the levels cannot be achieved in a specific building assembly alternative compliance paths are available that will demonstrate that the assembly meets the requirements of the code.

Cost Impact: The code change proposal will not increase the cost of construction.

RE55-13

Public Hearing:	Committee:	AS	AM	D
	Assembly:	ASF	AMF	DF

R402.2.2-EC-SCHWARZ

RE56 – 13

R202 (NEW) (IRC N1101.9), R402.2.3 (IRC N1102.2.3), R402.2.3.1 (NEW) (IRC N1102.2.3.1 (NEW)), R402.2.3.2 (NEW) (IRC N1102.2.3.2 (NEW)), Chapter 5

Proponent: Forrest Fielder, CBO, Arizona Building Officials (fielder_4@msn.com)

Revise as follows:

R402.2.3 (N1102.2.3) ~~Eave baffle~~ .Vented attics. Roof assemblies containing vented attics shall comply with 402.2.3.1 and 402.2.3.2.

R402.2.3.1 (N1102.2.3.1) Eave baffle. For air permeable insulation in vented attics, a baffle shall be installed adjacent to soffit and eave vents. Baffles shall maintain an opening equal or greater than the size of the vent. The baffle shall extend over the top of the attic insulation. The baffle shall be permitted to be any solid material.

R402.2.3.2 (N1102.2.3.2) Radiant barriers. In Climate Zones 1, 2, and 3, vented attics shall contain radiant barriers, as tested in accordance with ASTM C1313M-12 and installed in accordance with ASTM C1743-12

> **Exception:** Attics containing no HVAC space conditioning equipment or attics with a maximum of 10 lineal feet of supply or return ducting.

Add new definition as follows:

IECC SECTION R202 (IRC N1101.9)
GENERAL DEFINITIONS

RADIANT BARRIER. A material having a low emittance surface (0.1 or less) and where installed in building assemblies, the low emittance surface shall face a ventilated or unventilated air space.

Add new standards to Chapter 5 as follows:

ASTM C1313/C1313M-12 Standard Specification for Sheet Radiant Barriers for Building Construction Applications

ASTM C1743-12 Standard Practice for Installation and Use of Radiant Barrier Systems (RBS) in Residential Building Construction

Reason: In cooling climates, attic radiant barriers (ARBs) have been shown to conserve substantial amounts of energy by reducing temperatures in vented attics. Lower attic temperatures slow the rate of temperature differential – driven heat transfer from ceiling envelope elements and HVAC equipment and ducting.
Attic radiant barriers are extensively used across Climate Zones 1, 2 and 3, i.e. in the sunbelt areas, and numerous demonstration projects and studies have confirmed the energy savings and cost-effectiveness of these installations. Such radiant barrier products have been on the market for over 24 years and are used by 87 of the top 100 US Builders. They have an established history and have been accepted into several regional code requirements and are included in the Energy Star Reference Home Guidelines. Some 650 million square feet of radiant barriers are installed annually.

The current state and city codes that include radiant barrier are:

- HI – Chapter 181 of Title 3, Table 402.1.1.1, Section 402.1.1.6, 402.1.1.8.1
- TX - Austin, Chapter 25-12, Article 12. Energy Code, Section 402.6
- FL – 2010 Florida Building Code, Section 405.6.1, Figure 405.6.1 & Table 303.2 (ASTM Standards)
- CA – Title 24, Part 6, Subsection 8, Section (f), Subsection 2; Table 151-B; Table 151-C; Table 151-D

This product has two ASTM Standards that are applicable – ASTM C1313, “Standard Specification for Sheet Radiant Barriers for Building Construction Applications,” and ASTM C1743, “Standard Practice for Installation and Use of Radiant Barrier Systems (RBS) in Residential Building Construction”. This proposal requires the use of radiant barriers in a manner consistent with the existing language in the Energy Star for Homes – “Version 3, Exhibit 1” and, additionally, requires that the radiant barriers comply with the two ASTM standards just referenced.

The Department of Energy (DOE) has published the "Radiant Barrier Fact Sheet"[1] that is available on the DOE website through the following link: http://www.ornl.gov/sci/ees/etsd/btric/RadiantBarrier/RBFactSheet2010.pdf

A comprehensive review of radiant barrier studies was performed by Mario Medina, Ph.D. P.E. "This paper provides a general description of RBs, including installation configurations, the physical principles that make them work, and the laboratory and field experiments used to evaluate their thermal performance. An extensive review of the literature is summarized, highlighting fundamental issues, such as reduced ceiling heat flows, reduced space cooling and heating loads, and changes in attic temperatures produced by the installation of RBs in residential attics."[2] The document has been mentioned here as an additional reference related to radiant barrier product information and to highlight the scope of "benefit" studies that have been completed.

The study entitled "Radiant Barrier Impact on Selected Building Performance Measurements Model Home Case Study"[3], authored by B.E. Davis and J. Tiller, from the Appalachian State University Energy Center, sponsored by Centex Homes in Charlotte, NC, demonstrates the energy savings associated with the use of radiant barriers in attics. In the study, two identical homes were fit with over sixty sensors, where one house contained a radiant barrier (designated as the "Belmont" home) and one did not. The house with the radiant barrier had a peak attic temperature drop by 23%, and the improved efficiency of the cool air delivered through the ducts was 57%.

The current language in the Energy Star for Homes – "Version 3, Exhibit 1" requires the use of radiant barriers in vented attics of the reference home, with an exception for attics containing no HVAC space conditioning equipment and a maximum of 10 linear feet of supply or return ducting.

[1] Department of Energy "Radiant Barrier Fact Sheet" prepared by the Oak Ridge National Laboratory (2012).
[2] Medina, Mario, "A Comprehensive Review of Radiant Barrier Research Including Laboratory and Field Experiments", report prepared for the Reflective Insulation Manufacturers Association.
[3] Davis, Bruce Eugene & Tiller, Jeffrey, "Radiant Barrier Impact on Selected Building Performance Measurements, Model Home Case Study, Centex Homes".

Cost Impact: The code change proposal will increase the cost of construction.

Analysis: A review of the standards proposed for inclusion in the code, ASTM C1313/C1313M-12 Standard Specification for Sheet Radiant Barriers for Building Construction Applications, and C1743-12 Standard Practice for Installation and Use of Radiant Barrier Systems (RBS) in Residential Building Construction with regard to the ICC criteria for referenced standards (Section 3.6 of CP#28) will be posted on the ICC website on or before April 1, 2013.

RE56-13

Public Hearing:	Committee:	AS	AM	D
	Assembly:	ASF	AMF	DF

R402.2.3-EC-FIELDER

RE57 – 13

R202 (NEW) (IRC N1101.9 (NEW)), R402.2.3, (N1102.2.3) R402.2.3.1 (NEW) (IRC N1102.2.3.1 (NEW)), R402.2.3.2 (NEW) (IRC N1102.2.3.2 (NEW), Chapter 5

Proponent: Wesley Hall, Reflectix, Inc., representing self (wes.hall@reflectixinc.com**),** Vickie Lovell, InterCode Incorporated, representing the Reflective Insulation Manufacturers Association International (Vickie@InterCodeinc.com)

Revise as follows:

R402.2.3 (N1102.2.3) Vented Attics. Sections 402.2.3.1 and 402.2.3.2 shall apply to roof assemblies containing vented attics.

R402.2.3.1 (N1102.3.1) Eave baffle. For air permeable insulations in vented attics, a baffle shall be installed adjacent to soffit and eave vents. The baffle shall maintain an opening equal or greater than the size of the vent. The baffle shall extend over the top of the attic insulation. The baffle shall be permitted to be any solid material.

R402.2.3.2 (N1102.2.3.2) Radiant barrier. Radiant barriers, used to supplement insulation in Climate Zones 1, 2, and 3, shall comply with the requirements of ASTM C1313 and shall be installed in accordance with ASTM C1743.

~~**R402.2.3 (N1102.2.3) Eave baffle.** For air permeable insulations in vented attics, a baffle shall be installed adjacent to soffit and eave vents. Baffles shall maintain an opening equal or greater than the size of the vent. The baffle shall extend over the top of the attic insulation. The baffle shall be permitted to be any solid material.~~

Add new definition as follows:

IECC SECTION R202 (IRC N1101.9)
GENERAL DEFINITIONS

RADIANT BARRIER. A material having a low emittance surface of 0.1 or less installed in building assemblies.

Add new standards to Chapter 5 as follows:

ASTM
C1313/C1313M-12 Standard Specification for Sheet Radiant Barriers for Building Construction Applications

C1743-12 Standard Practice for Installation and Use of Radiant Barrier Systems (RBS) in Residential Building Construction

Analysis: A review of the standards proposed for inclusion in the code, ASTM C1313/C1313M-12 Standard Specification for Sheet Radiant Barriers for Building Construction Applications, and C1743-12 Standard Practice for Installation and Use of Radiant Barrier Systems (RBS) in Residential Building Construction with regard to the ICC criteria for referenced standards (Section 3.6 of CP#28) will be posted on the ICC website on or before April 1, 2013.

Reason: (HALL) Radiant barriers are a viable building option, widely distributed and have an established place in the market. The purpose of this proposal is to provide information and references for radiant barriers.

The content of this proposal contains product requirements and references that will aid the contractors and code officials in recognizing and understanding radiant barrier products and correct installation procedures.

Attic radiant barriers are extensively used across Climate Zones 1, 2 and 3, i.e. in the sunbelt areas. These products have been on the market for over 24 years and are used by 87 of the top 100 US Builders. They have an established history and have been accepted into several regional code requirements and are included in the Energy Star Homes Guidelines. Some 650 million square feet of the product is being installed annually.

The current state and city codes that include radiant barrier are:

- HI – Chapter 181 of Title 3, Table 402.1.1.1, Section 402.1.1.6, 402.1.1.8.1
- TX - Austin, Chapter 25-12, Article 12. Energy Code, Section 402.6
- FL – 2010 Florida Building Code, Section 405.6.1, Figure 405.6.1 & Table 303.2 (ASTM Standards)
- CA – Title 24, Part 6, Subsection 8, Section (f), Subsection 2; Table 151-B; Table 151-C; Table 151-D

This product has two ASTM Standards that are applicable – ASTM C1313, "Standard Specification for Sheet Radiant Barriers for Building Construction Applications," and ASTM C1743, "Standard Practice for Installation and Use of Radiant Barrier Systems (RBS) in Residential Building Construction". This proposal does not require the use of radiant barriers but requires that, when they are used, they comply with the two ASTM standards just referenced.

ASTM C1743-12 can be viewed at: http://reflectixinc.com/literature/securedpdfs/C1743.pdf

(LOVELL) The use of radiant barriers in vented attics in hot climates has been shown to conserve substantial amounts of energy by reducing the temperatures in the attic. If the attic temperature is lower, that slows the rate of temperature differential and transfers heat away from ceiling envelope elements and HVAC equipment and ducting. Attic radiant barriers are extensively used across Climate Zones 1, 2 and 3, i.e. in the sunbelt areas, and numerous demonstration projects and studies have confirmed the energy savings and cost-effectiveness of these installations. Such radiant barrier products have been on the market for over 24 years and are used by 87 of the top 100 US Builders. They have an established history and have been accepted into several regional code requirements and are included in the Energy Star Homes Guidelines. Some 650 million square feet of the product is installed annually.

The current state and city codes that include radiant barrier are:

- HI – Chapter 181 of Title 3, Table 402.1.1.1, Section 402.1.1.6, 402.1.1.8.1
- TX - Austin, Chapter 25-12, Article 12. Energy Code, Section 402.6
- FL – 2010 Florida Building Code, Section 405.6.1, Figure 405.6.1 & Table 303.2 (ASTM Standards)
- CA – Title 24, Part 6, Subsection 8, Section (f), Subsection 2; Table 151-B; Table 151-C; Table 151-D

This product has two ASTM Standards that are applicable – ASTM C1313, "Standard Specification for Sheet Radiant Barriers for Building Construction Applications," and ASTM C1743, "Standard Practice for Installation and Use of Radiant Barrier Systems (RBS) in Residential Building Construction". This proposal requires the use of radiant barriers in a manner consistent with the existing language in the Energy Star for Homes – "Version 3, Exhibit 1" and, additionally, requires that the radiant barriers comply with the two ASTM standards just referenced.

The Department of Energy (DOE) has published the "Radiant Barrier Fact Sheet that is available on the DOE website through the following link: http://www.ornl.gov/sci/ees/etsd/btric/RadiantBarrier/RBFactSheet2010.pdf
Values taken from this DOE document are utilized in the "Savings Benefit to the Home Owner" section below.

A very comprehensive study was performed by Mario Medina. "This paper provides a general description of RBs, including installation configurations, the physical principles that make them work, and the laboratory and field experiments used to evaluate their thermal performance. An extensive review of the literature is summarized, highlighting fundamental issues, such as reduced ceiling heat flows, reduced space cooling and heating loads, and changes in attic temperatures produced by the installation of RBs in residential attics. The document has been mentioned here as an additional reference related to radiant barrier product information and to highlight the scope of "benefit" studies that have been completed.

The study entitled "Radiant Barrier Impact on Selected Building Performance Measurements Model Home Case Study, authored by B.E. Davis and J. Tiller, from the Appalachian State University Energy Center, sponsored by Centex Homes in Charlotte, NC, and demonstrates the energy savings associated with the use of radiant barriers in attics. In the study, two identical homes were fit with over sixty sensors, where one house contained a radiant barrier (designated as the "Belmont" home) and one did not. The house with the radiant barrier had a peak attic temperature drop by 23% and the improved efficiency of the cool air delivered through the ducts was 57%.

The current language in the Energy Star for Homes – "Version 3, Exhibit 1" requires the use of radiant barriers in vented attics, with an exception for attics containing no HVAC space conditioning equipment and a maximum of 10 linear feet of supply or return ducting.

Cost Calculator – to home owner – new structure – hip roof:

- Product Cost - Radiant Barrier OSB Panel – $0.11 per sq. ft.-(takes into account waste) [4]
- 2,000 sq. ft. house, ranch, hip roof
- 2,200 sq. ft. of roof area x $0.11 per sq. ft. (radiant barrier cost) = $242.00
- Cost to home owner - $242.00
- Additional cost added to monthly payment of a 30 year mortgage – 4% fixed interest rate:
- $242.00 @ 4% = addition of $1.16 to the monthly payment

Savings Benefit to the Home Owner:

- Cost to add Radiant Barrier OSB - $1.16 per month (per above)
- 2,000 sq. ft. house, ranch, hip roof
- Savings as calculated in the Department of Energy "Radiant Barrier Fact Sheet"
- Code level insulation with well-sealed ducts in the attic
- Zone 1 - $0.03 per sq. ft. x 2,000 sq. ft. = $60.00 / 12 months = $5.00 per month
- Zone 2 - $0.03 per sq. ft. x 2,000 sq. ft. = $60.00 / 12 months = $5.00 per month
- Zone 3 - $0.02 per sq. ft. x 2,000 sq. ft. = $40.00 / 12 months = $3.33 per month

➢ The cost for energy is based on first year (2012) values – if increases in energy cost due to inflation and other factors occur – annual savings will increase proportionally.

In summary, this exercise exemplifies the immediate energy cost savings that are netted when a radiant barrier is included in the design of a new home in Climate Zones 1, 2 and 3 with "well-sealed" ducts in the attic. The cost to the new home is small and the energy savings are significant over the life of the home.

References:

Davis, Bruce Eugene & Tiller, Jeffrey, "Radiant Barrier Impact on Selected Building Performance Measurements, Model Home Case Study", Appalachian State University Energy Center, USA, 2009.
Medina, M. A., "A Comprehensive Review of Radiant Barrier Research Including Laboratory and Field Experiments." Paper CH-12-C051, ASHRAE Transactions, Vol. 118, Part 1, 2012.
ASTM C1743-12 can be viewed at: http://reflectixinc.com/literature/securedpdfs/C1743.pdf.

Cost Impact: The code change proposal will not increase the cost of construction.

RE57-13

Public Hearing:	Committee:	AS	AM	D
	Assembly:	ASF	AMF	DF

R402.3 (NEW)-EC-HALL

RE58 – 13
R402.2.4 (IRC N1102.2.4)

Proponent: Jeff Inks, representing the Window & Door Manufacturers Association.

Revise as follows:

R402.2.4 (N1102.2.4) Access hatches and doors. Access doors from conditioned spaces to unconditioned spaces (e.g., attics and crawl spaces) shall be weatherstripped and insulated to a level equivalent to the insulation on the surrounding surfaces. Access shall be provided to all equipment that prevents damaging or compressing the insulation. A wood framed or equivalent baffle or retainer is required to be provided when loose fill insulation is installed, the purpose of which is to prevent the loose fill insulation from spilling into the living space when the attic access is opened, and to provide a permanent means of maintaining the installed R-value of the loose fill insulation.

> **Exception:** Vertical doors that provide access from conditioned to unconditioned spaces shall be permitted to meet the requirements of Table R402.1.1 based on the applicable climate zone specified in Chapter 3.

Reason: As currently written, this provision is being interpreted in some jurisdictions as requiring vertical doors providing access to certain unconditioned spaces such as attics to meet the thermal insulation levels of the surrounding wall they are installed in rather than the thermal requirements for doors contained in Table R402.1.1 applicable to the building thermal envelope. The thermal performance requirements for these vertical doors should be no greater than those for exterior doors installed elsewhere in the building thermal envelope.

Cost Impact: The code change proposal will not increase the cost of construction.

RE58-13

Public Hearing:	Committee:	AS	AM	D
	Assembly:	ASF	AMF	DF

R402.2.4-EC-INKS

RE59 – 13
R402.2.4 (IRC N1102.2.4)

Proponent: Joel Rodriguez, Gwinnett county, Georgia, representing Metropolitan Atlanta Inspector's Association (MAIA) (joel.rodriguez@gwinnettcounty.com)

Revise as follows:

R402.2.4 (N1102.2.4) Access hatches and doors. Access doors from conditioned spaces to unconditioned spaces (e.g., attics and crawl spaces) shall be weatherstripped and insulated to a level in accordance with the following insulation values:

1. Hinged vertical doors shall have a maximum *U*-Factor of U-0.20 (R-5 minimum);
2. Hatches/scuttle hole covers shall have a maximum *U*-Factor of U-0.05 (R-19 minimum); and
3. Pull down stairs shall have a maximum *U*-Factor of U-0020 with a minimum of 75 percent of the panel area having (R-5 minimum) insulation.

~~equivalent to the insulation on the surrounding surfaces.~~ Access shall be provided to all equipment that prevents damaging or compressing the insulation. A wood framed or equivalent baffle or retainer is required to be provided when loose fill insulation is installed, the purpose of which is to prevent the loose fill insulation from spilling into the living space when the attic access is opened, and to provide a permanent means of maintaining the installed R-value of the loose fill insulation. There shall be a floor or landing on top of the ceiling joist with a minimum width of 10 inches (254 mm) around the perimeter of access hatches and pull down stairs into an attic area.

Reason: To eliminate the conflict in the insulation requirement language in TABLE R402.1.1 INSULATION AND FENESTRATION REQUIREMENTS BY COMPONENT, TABLE R402.1.3 EQUIVALENT U-FACTORS and 402.2.3 Fenestration access hatches and doors. To insulate to the levels specified in R402.2.4 Access hatches and doors compared to the above insulation requirements is expensive, in some cases not practical. It doesn't make sense to require R-30 to R-49 insulation on a hatch or pull down stairs when one can have a skylight that is *U*-FACTOR 0.55-0.75 (les than R-2). The calculated additional energy costs between and R-5 and R-30 is approximately $7.00 per year for Climate Zoe 4 (based on the methodology listed in ASHRAE Handbook Fundamentals for 10 SF pull down stairs. (Electricity cost based on $0.11 KWH and Natural Gas $0.70 Therm). To require a door into an attic to be R-13 to R-20+ doesn't make sense when a n exterior door or window exposed to the outside can be R-2 to R-3 (*U*-FACTOR 0.32-0.55). The manufacturers of doors, pull down stairs and hatches currently manufacture fenestration that meets these proposed insulation requirements. There is not a manufacturer that makes an R-13 or better door and the only way to achieve an R-30 or better with pull down stairs is to build or install a separate cover over the pull down stairs. This can create an unsafe entrance into the attic because the step up will be 16 inches or more, and that conflicts with IRC R311.7.5.1 Risers.

Cost Impact: The code change proposal will not increase the cost of construction. The savings will be a minimum of $200 per opening.

RE59-13

Public Hearing:	Committee:	AS	AM	D
	Assembly:	ASF	AMF	DF

R402.2.4-EC-RODRIGUEZ

RE60 – 13

R402.2.7 (IRC N1102.2.7), Table R402.4.1.1 (IRC Table N1102.4.1.1)

Proponent: Joseph Lstiburek, Building Science Corporation, representing self (joe@buildingscience.com)

Revise as follows:

R402.2.7 (N1102.2.7) Floors. Floor framing cavity insulation shall be installed to maintain permanent contact with the underside of the subfloor decking.

> **Exception:** The floor framing cavity insulation shall be permitted to be in contact with the topside of sheathing or continuous insulation installed on the bottom side of floor framing when combined with insulation that meets or exceeds the minimum Wood Frame Wall R-value in Table 402.1.1 and extends from the bottom to the top of all perimeter floor framing members.

TABLE 402.4.1.1 (N1102.4.1.1)
AIR BARRIER AND INSULATION INSTALLATION

COMPONENT	CRITERIA
Floors (including above-garage and cantilevered floors)	~~Insulation~~ Floor framing cavity insulation shall be installed to maintain permanent contact with underside of subfloor decking or floor framing cavity insulation shall be permitted to be in contact with the topside of sheathing or continuous insulation installed on the bottom side of floor framing and extends from the bottom to the top of all perimeter floor framing members. The air barrier shall be installed at any exposed edge of insulation.

(Portions of Table not shown remain unchanged)

Reason: Requiring insulation in floors to be in direct contact with the underside of subfloor decking is one insulating option. Another option is to have an airspace between the floor sheathing and the top of the cavity insulation where this cavity insulation is in direct contact with the topside of sheathing or continuous insulation installed on the underside of the floor framing and is combined with perimeter insulation that meets or exceeds the R-value requirements for walls. This second option leads to fewer cold spots yet does not change the heat loss as long as the cavity insulation is in direct contact with a sheathing below it or continuous insulation below it. It also facilitates services to be enclosed within the thermal envelope. Examples of these configurations are illustrated below:

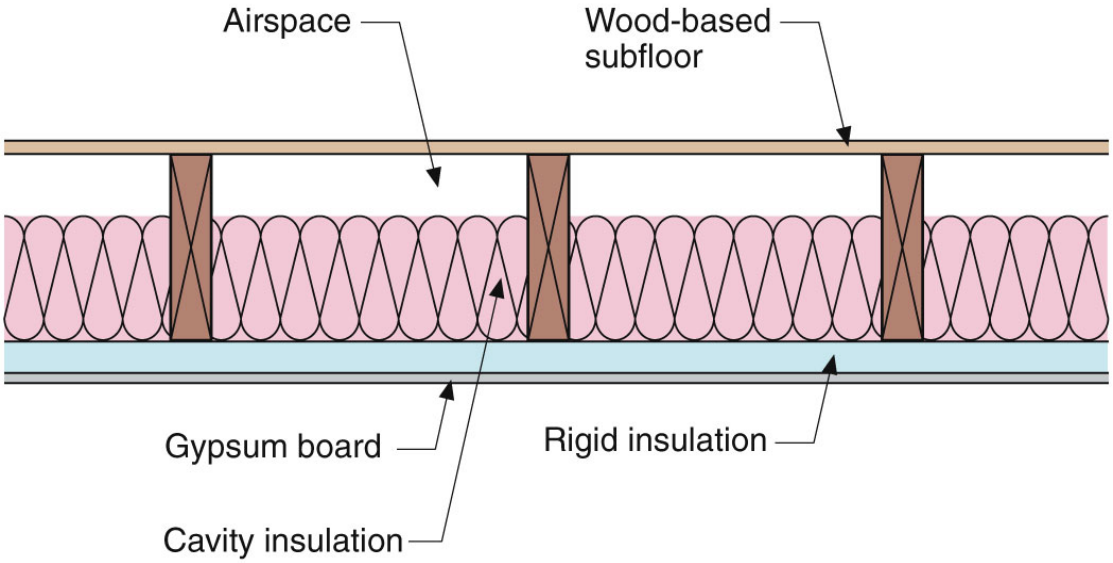

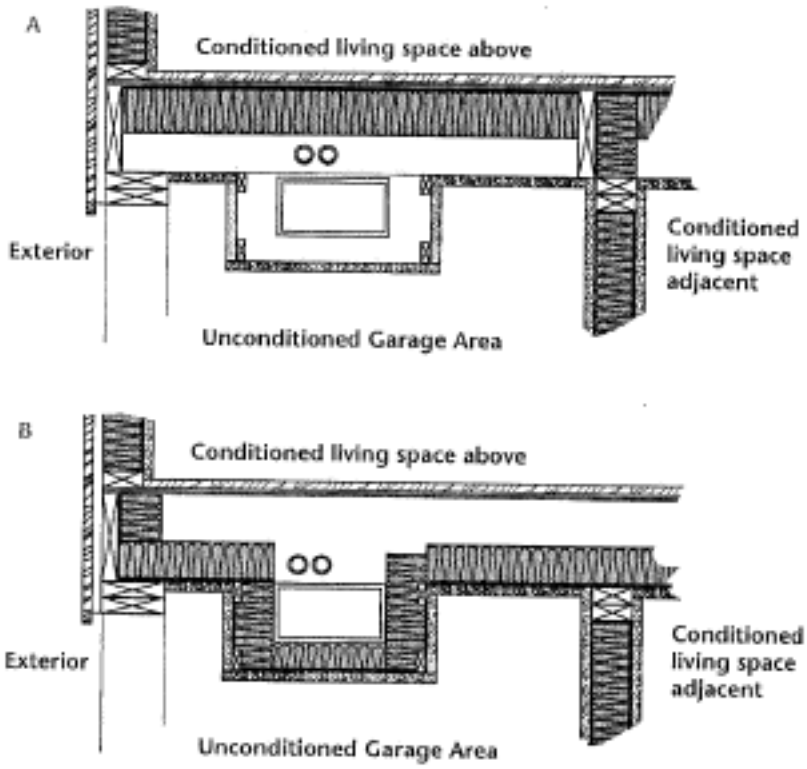

Cost Impact: The code change proposal will not increase the cost of construction.

RE60-13

Public Hearing:	Committee:	AS	AM	D
	Assembly:	ASF	AMF	DF

R402.2.7-EC-LSTIBUREK

RE61 – 13
R402.2.7 (IRC N1102.2.7)

Proponent: Eric Makela, Britt/Makela Group, Inc., representing Northwest Energy Codes Group (Eric@BrittMakela.com)

Revise as follows:

R402.2.7 (N1102.2.7) Floors. Floor insulation shall be installed to maintain permanent contact with the underside of the subfloor decking. Insulation supports for batt insulation shall be installed so that spacing is no more than 24 inches on center and shall not compress the insulation. Foundation vents shall be placed so that the top of the vent is below the lower surface of the floor insulation.

> **Exception:** Where foundation vents are not placed so that the top of the vent is below the lower surface of the floor insulation, a permanently attached baffle shall be installed from the top of the vent to below the lower surface of the floor insulation at an angle of 30° from horizontal, to divert air flow below the lower surface of the floor insulation.

Reason: The 2012 IECC currently requires insulation installed in a floor system to maintain permanent contact with the underside of the subfloor decking. Insulation support systems, if not installed properly, can compress the insulation degrading the insulation R-value. This proposal requires that insulation supports not compress the installed insulation to ensure that it maintains its full R-value.

The second portion of the code change proposal focuses on the installation of foundation vents in relation to the installed insulation. Foundation vents that are installed at the same level as the insulation can direct air directly at the insulation reducing the R-value of the product through windwashing. Insulation will also act as a barrier to ventilation air, reducing the effectiveness of the foundation vent. This proposal will require that foundation vents either be installed below the line of insulation, or when not possible, require the installation of baffles to direct the ventilation air below the insulation

Cost Impact: The code change proposal will not increase the cost of construction.

RE61-13

Public Hearing:	Committee:	AS	AM	D
	Assembly:	ASF	AMF	DF

R402.2.7-EC-MAKELA

RE62 – 13
R402.2.13 (NEW) (IRC N1102.2.13 (NEW))

Proponent: Ellen Eggerton, representing Virginia Building and Code Officials Association

Revise as follows:

R402.2.13 (N1102.2.13) Mechanical rooms. Where a room contains combustion equipment, and outside air is admitted directly into the room to provide combustion air for the equipment, then the walls, ceilings, and floors of that room bound unconditioned space and shall be insulated as part of the *building thermal envelope*.

Reason: AHJs have disagreed regarding how to apply the energy code to "mechanical rooms" with permanently installed air ducts directly connecting the room to the outdoor environment. This proposal attempts to apply the code requirements to these rooms in a feasible and enforceable manner. Note that by identifying the enclosure of the mechanical room as part of the thermal envelope, these surfaces will be sealed as well as insulated, thereby preventing unwanted and energy-consuming air intrusion into the conditioned living space adjacent to the mechanical room.

Cost Impact: To the extent that mechanical rooms have previously been considered unconditioned space and were enforced as such, this clarifying proposal has no cost impact. If these rooms were previously uninsulated, there will be some costs associated with insulating the customary framed walls and ceiling of the room, as well as sealing potential avenues of air infiltration to the conditioned living space beyond.

RE62-13

Public Hearing:	Committee:	AS	AM	D
	Assembly:	ASF	AMF	DF

R402.2.13 (NEW)-EC-EGGERTON

RE63 – 13

Table R402.1.1 (IRC Table N1102.1.1), R402.2.13 (NNEW) (IRC N1102.2.13 (NEW))

Proponent: Jeremiah Williams, representing U.S. Department of Energy (jeremiah.williams@ee.doe.gov)

Revise as follows:

TABLE R402.1.1 (N1102.1.1)
INSULATION AND FENESTRATION REQUIREMENTS BY COMPONENT

(Portions of Table not shown remain unchanged)

h. First value is cavity insulation, second is continuous insulation or insulated siding, so "13+5" means R-13 cavity insulation plus R-5 continuous insulation or insulated siding. ~~If structural sheathing covers 40 percent or less of the exterior, continuous insulation *R*-value shall be permitted to be reduced by no more than R-3 in the locations where structural sheathing is used – to maintain a consistent total sheathing thickness.~~

R402.2.13 (N1102.2.13) Walls with partial structural sheathing. Where Section R402.1.1 would require continuous insulation on exterior walls and structural sheathing covers 40 percent or less of the gross area of all exterior walls, the continuous insulation *R*-value shall be permitted to be reduced by an amount necessary to result in a consistent total sheathing thickness, but not more than R-3, on areas of the walls covered by structural sheathing, This reduction shall not apply to the *U*-factor alternative approach in Section R402.1.3 and the total UA alternative in Section R402.1.4.

Reason: This is a clarification not intended to change the meaning of the code. Moving the relevant text out of the footnote and into a separate code section allows for a more thorough description of the sheathing reduction allowance.

Cost Impact: The code change proposal will not increase the cost of construction.

RE63-13

Public Hearing:	Committee:	AS	AM	D	
	Assembly:	ASF	AMF	DF	

R402.2.13 (NEW)-EC-WILLIAMS

RE64 – 13

R402.3 (NEW) (IRC N1102.3 (NEW)), R402.3.1 (NEW) (IRC N1102.3.1 (NEW)), Table 402.3.1 (NEW) (IRC Table N1102.3.1 (NEW)), Chapter 5

Proponent: Jeremiah Williams, representing U.S. Department of Energy (jeremiah.williams@ee.doe.gov)

Add new text as follows:

R402.3 (N1102.3) Solar Properties of Opaque Surfaces (prescriptive).

R402.3.1 (N1102.3.1) Roof Solar Reflectance and Thermal Emittance. Roofs having a slope less than 2:12, directly above cooled *conditioned spaces* in climate zones 1, 2, and 3 shall comply with at least one option in Table R402.3.1.

Exceptions: The following are exempt from the requirements in Table R402.3.1:

1. Portions of roofs that include or are covered by:
   - 1.1 Photovoltaic systems or components
   - 1.2 Solar air or water heating systems or components
   - 1.3 Roof gardens or landscaped roofs
   - 1.4 Above-roof decks or walkways
   - 1.5 Skylights
   - 1.6 HVAC systems, components, and other opaque objects mounted above the roof
   - 1.7 A radiant barrier is installed
2. Portions of roofs shaded during the peak sun angle on the summer solstice by permanent features of the building, or by permanent features of adjacent buildings
3. Ballasted roofs with a minimum stone ballast of 17 lbs/ft^2 (74 kg/m2) or 23 lbs/ft^2 pavers (117 kg/m^2)
4. Roofs where a minimum of 75% of the roof area meets a minimum of one of the exceptions above.

TABLE R402.3.1 (N1102.3.1)
MINIMUM ROOF REFLECTANCE AND EMITTANCE OPTIONS[a]

Three-year aged solar reflectance[b] of 0.55 and three-year aged thermal emittance[b] of 0.75
Initial solar reflectance[b] of 0.70 and initial thermal emittance[b] of 0.75
Three-year-aged solar reflectance index[c] of 64
Initial solar reflectance index[c] of 82

a. The use of area-weighted averages to meet these requirements shall be permitted. Materials lacking initial tested values for either *solar reflectance* or *thermal reflectance*, shall be assigned both an initial *solar reflectance* of 0.10 and an initial *thermal emittance* of 0.90. Materials lacking three-year aged tested values for either *solar reflectance* or *thermal reflectance*, shall be assigned both a three-year aged *solar reflectance* of 0.10 and a three-year aged *thermal emittance* of 0.90.

b. Tested solar reflectance and thermal emittance shall be in accordance with ANSI/CRRC-1-2010.

c. Solar reflectance index (SRI) determined in accordance with ASTM E1980-11 using a convection coefficient of 2.1 BTU/h-ft^2-F (12W/m^2.K). Calculation of aged SRI shall be based on aged tested values. Calculation of initial SRI shall be based on initial tested values.

Add new standards to Chapter 5 as follows:

ASTM

E 1980-11 Standard Practice for Calculating Solar Reflectance Index of Horizontal and Low-sloped Opaque Surfaces

CRCC Cool Roof Rating Council
1610 Harrison St
Oakland, CA 94612

ANSI/CRCC-1-2010 Cool Roof Rating Council CRCC-1 Standard

Reason: This proposed requirement applies to low-sloped roofs only and is consistent with requirements for commercial buildings in Section C402.2.1.1 of the 2012 IECC. Low-sloped roofs are commonly single-ply membranes, built-up roofs, modified bitumen membranes, and spray polyurethane foam. The U.S. DOE and Levinson report that high levels of reflectance for these types of roofs can typically be obtained for no cost increase over darker, less reflective roofs.

The low-slope DOE Cool Roof Calculator (http://www.ornl.gov/sci/roofs+walls/facts/CoolCalcEnergy.htm) reports these energy savings compared to a "black roof":

Climate Zone	Example City	Heating System Type	Net (Heating and Cooling) Annual Savings per 1000 ft^2 of roof area
2	Houston TX	Heat Pump	$22
		Natural Gas	$24
3	Atlanta GA	Heat Pump	$15
		Natural Gas	$17
Assumptions: R-30 insulation, 0.70 Solar reflectance, 0.75 thermal emittance, 12 cents/kWh electricity, $1.00/therm natural gas, 3.5 COP cooling, 2.0 COP heat pump heating, 80% AFUE gas heat.			

Studies illustrating the savings from cool roofs are available on the Cool Roof Ratings Council website. http://www.coolroofs.org/article.html#energy For example, the Florida Solar Energy Center tested seven retail shops in a strip mall in Cocoa, Florida over a two-year period, which allowed surface degradation over a year period to be accounted for. The roof was resurfaced to alter the surface reflectivity from approximately 29% to 75%. There was a 25.3% average reduction in summer space cooling energy in the seven shops.

References:

Parker, D., J. Sonne, J. Sherwin. 1997. Demonstration of Cooling Savings of Light Colored Roof Surfacing in Florida Commercial Buildings: Retail Strip Mall. Florida Solar Energy Center. Cocoa, Florida.
U.S. Department of Energy. 2010. Guidelines for Selecting Cool Roofs. Washington, D.C.
Levinson, R. 2012. The Case for Cool Roofs. Lawrence Berkeley National Laboratory. Berkeley, California.
http://heatisland.lbl.gov/sites/heatisland.lbl.gov/files/Levinson_2012_Case%20for%20cool%20roofs.pdf

Cost Impact: The code change proposal may increase the cost of construction in certain situations.

Analysis: A review of the standards proposed for inclusion in the code, ASTM E1980-11 Standard Practice for calculating Solar Reflectance Index of Horizontal and Low-sloped Opaque Surfaces and CRRC Standard CRRC-1-2010 Cool Roof Raing Council CRRC-1 Standard with regard to the ICC criteria for referenced standards (Section 3.6 of CP#28) will be posted on the ICC website on or before April 1, 2013.

RE64-13

Public Hearing:	Committee:	AS	AM	D
	Assembly:	ASF	AMF	DF

R402.3 (NEW)-EC-WILLIAMS

RE65-13

202 (NEW) (IRC N1101.9 (NEW)), R402.3.3 (NEW) (IRC N1102.3.3 (NEW)), Table R402.3.3 (NEW) (IRC Table N1102.3.3 (NEW)), R402.3.6 (IRC N1102.3.6)

Proponent: Dr. Thomas D. Culp, Birch Point Consulting LLC, representing the Glazing Industry Code Committee (culp@birchpointconsulting.com)

Revise as follows:

R402.3.3 (N1102.3.3) SHGC Shading Adjustment. Vertical fenestration in Climate Zones 1 through 3 shall be permitted to meet the SHGC requirements of Table R402.3.3 based upon the calculated projection factor of any overhang, eave, or permanently attached shading device that covers the full width of the glazing and extends a minimum of 12 inches (0.3 m) beyond each side of thereof. Where different windows and glazed doors have different projection factors, they shall each be evaluated separately, or an area-weighted projection factor value shall be permitted.

TABLE R402.3.3 (N1102.3.3)
EQUIVALENT SHGC FOR VERTICAL FENESTRATION
WITH SHADING PROJECTIONS

Projection Factor	Maximum SHGC
PF < 0.2	0.25
0.2 ≤ PF < 0.5	0.30
PF ≥ 0.5	0.40

~~**R402.3.6 (N1102.3.6)**~~ **R402.3.7 (N1102.3.7) Replacement fenestration.** Where some or all of an existing fenestration unit is replaced with a new fenestration product, including sash and glazing, the replacement fenestration unit shall meet the applicable requirements for *U*-factor and SHGC in Table R402.1.1 and Section R402.3.3.

Add new definition as follows:

IECC SECTION R202 (IRC N1101.9)
GENERAL DEFINITIONS

PROJECTION FACTOR. The ratio of the horizontal depth of an overhang, eave, or permanently attached shading device, divided by the distance measured vertically from the bottom of the fenestration glazing to the underside of the overhang, eave, or permanently attached shading device.

Reason: The purpose of this proposal is to provide a prescriptive allowance for shading as an appropriate method for controlling solar gains in addition to glazing SHGC. Shading has been part of good building design for millennia, and its use should be encouraged. A prescriptive shading allowance is already included in the commercial IECC as well as ASHRAE 90.1, but is not currently included in the residential IECC, other than through the more complicated performance path.

The need to address shading has become even more important following the 2012 IECC, which introduced a very low 0.25 SHGC in zones 1-3. Even with the newest low-e coatings, it is borderline whether 0.25 SHGC can be achieved for certain products without the addition of tinted glass or a darker low-e, especially for picture windows and sliding glass doors that have a larger glass to frame ratio. Additionally, the low 0.25 SHGC could inhibit homeowners from replacing older inefficient windows, because the new 0.25 SHGC requirement would result in a mismatched appearance between the new replacement windows/doors and the rest of the windows.

Therefore, a shading credit is one way to provide flexibility for both new and replacement windows, while maintaining the overall solar control. This proposal is based on the same shading multipliers as in the commercial IECC, but simplified for easy enforcement in the residential code. Specifically, the shading allowance for south/east/west orientation is used to be conservative and account for the worst orientation, but written simply as an adjusted maximum SHGC that doesn't require determination of orientation by either the builder or code official. This is very conservative, requiring a 0.40 SHGC even for a 3 ft overhang over a 5 ft high window, providing good solar control while also allowing flexibility and promoting architectural shading.

Cost Impact: The code change proposal will not increase the cost of construction.

RE65-13

Public Hearing:	Committee:	AS	AM	D
	Assembly:	ASF	AMF	DF

R402.3.3 (NEW) -EC-CULP

RE66 – 13

R202 (NEW) (IRC N1101.9 (NEW)), R402.3.3 (NEW) (IRC N1102.3.3 (NEW)), Table R402.3.3 (NEW) (IRC Table N1102.3.3 (NEW))

Proponent: Don Surrena, CBO, representing National Association of Home Builders (NAHB) (dsurrena@nahb.org)

Add new text as follows:

R402.3.3 (IRC N1102.3.3) Glazed fenestration SHGC exception. In Climate Zones 1 through 4, permanently shaded vertical fenestration shall be permitted to satisfy the SHGC requirements. The projection factor of an overhang, eave, or permanently attached shading device shall be greater than or equal to the value listed in Table 402.3.3 for the appropriate orientation. The minimum projection shall extend beyond each side of the glazing a minimum of 12 inches (0.3 m). Each orientation shall be rounded to the nearest cardinal orientation (+/-45 degrees or 0.79 rad) for purposes of calculations and demonstrating compliance.

TABLE R402.3.3 (IRC N1102.3.3)
MINIMUM PROJECTION FACTOR REQUIRED BY ORIENTATION FOR SHGC EXCEPTION

ORIENTATION	PROJECTION FACTOR
North	>=0.40[a]
South	>=0.20
East	>=0.50
West	>=0.50

a. For the north orientation, a vertical projection located on the west-edge of the fenestration with equivalent PF >= 0.15 shall also satisfy the minimum projection factor requirement.

Add new definition as follows:

IECC SECTION R202 (IRC N1101.9)
GENERAL DEFINITIONS

PROJECTION FACTOR. The ratio of the horizontal depth of an overhang, eave, or permanently attached shading device, divided by the distance measured vertically from the bottom of the fenestration glazing to the underside of the overhang, eave, or permanently attached shading device.

Reason: The concept of using shading to reduce heat gain is integral to the architectural of some of the oldest world cultures. Shading in modern construction offers many possibilities. This proposed code change allows for the use of overhangs to meet the solar heat gain coefficient requirements within the IECC. Permanent exterior shading features, such as overhangs are allowed to be used in IECC Chapter 5 as a prescriptive trade-off to meeting SHGC requirements within the code. The calculation for determining the projection factor for overhangs has been in the 2000, 2003, 2006, and 2009 IECC for commercial buildings and has been proven to be very simple to calculate, fitting well into a prescriptive approach. The use of the shading devices was previously allowed under the 2003 IECC and is currently allowed as a trade-off under the commercial provisions of the IECC. Allowing flexibility in meeting the solar heat gain coefficient through the use of proven shading alternatives will increase the usability of the code for the building and design community while ensuring that the new fenestration is energy efficient. When credit for shading is permitted in the building code, it encourages an integrated approach to building designs, energy use, construction materials, renewable resources particularly as part of urban infrastructure, site and town planning and building design to be considered holistically. It also creates the opportunity for aesthetically pleasing and ingenious designs that might not otherwise be permitted.

Cost Impact: The code change proposal will not increase the cost of construction.

RE66-13

Public Hearing:	Committee:	AS	AM	D
	Assembly:	ASF	AMF	DF

R402.3.3 (NEW)-EC-SURRENA

RE67 – 13
R402.3.5 (NEW) (IRC N1102.3.5 (NEW))

Proponent: Craig Conner, Building Quality, representing self (craig.conner@mac.com)

Add new text as follows:

R402.3.5 (N1102.3.5) Energy Rating alternative. Fenestration with an energy rating (ER) of not less than 21 shall be considered in compliance with Table 402.1 for climate zones 6, 7 and 8. The ER shall be determined in accordance with Equation 4-g:

ER = (57.76 x SHGC) – (124 x U-factor) – (10 x (air infiltration rate)) + 40 Equation 4-g

Fenestration U-factor, SHGC, and air infiltration rate shall be determined and labeled as specified in Sections R103.1.3 and R402.4.3. Fenestration complying under this alternative shall be labeled by the manufacturer designation of ER. Default values shall not be used to compute ER.

Reason: The ER (Energy Rating) measures a window's suitability for residential use in a heating climate. ER combines the effects of U-factor, SHGC, and air infiltration rate, which are all based on fenestration testing already specified in the IECC and IRC and should already be on the window's NFRC label. While a low SHGC (low solar heat gain coefficient) is advantageous for cooling (hence the code requirement for a low SHGC in the south), a higher SHGC is advantageous for heating. The ER is only appropriate to a heating-dominated climate; therefore the use of ER is limited to zones 6, 7, and 8.

Since the minimum required ER never varies with the residential design, this alternative way to show compliance is easy to enforce. A window with an ER of 25 or more complies, a window with an ER less than 25 fails.

The ER concept has been used in Canada for more than 10 years and is part of their Model National Energy Code For Houses. Although not needed as a reference, the proposed equation comes from the Canadian ER (in the most recent CSA 440.2 Standard). Using the ER in the Unites States would encourage window sales across the U.S./Canadian border.

Cost Impact: The code change proposal will not increase the cost of construction.

RE67-13

Public Hearing:	Committee:	AS	AM	D
	Assembly:	ASF	AMF	DF

R402.3.5 (NEW)-EC-CONNER

RE68 – 13
R402.3.5 (IRC N1102.3.5)

Proponent: Daniel J. Walker, P.E., Thomas Associates, Inc., representing the National Sunroom Association (dwalker@thomasamc.com)

Revise as follows:

R402.3.5 (N1102.3.5) Sunroom ~~*U*-factor~~ Fenestration. All *sunrooms* enclosing conditioned space shall meet the fenestration requirements of this code.

Exception: For *sunrooms* with *thermal isolation* and enclosing *conditioned space*, ~~in Climate Zones 4 through 8,~~ the following exceptions to the fenestration requirements of this code shall apply:

1. In Climate Zones 2 through 8 ~~T~~the maximum fenestration *U*-factor shall be 0.45; and
2. ~~T~~the maximum skylight *U*-factor shall be 0.70.
2. In Climate Zones 1 through 3 the maximum SHGC shall be 0.30.

New fenestration separating the *sunroom* with *thermal isolation* from *conditioned space* shall meet the *building thermal envelope* requirements of this code.

Reason: The requirements for thermally isolated sunrooms was changed in the previous code cycle to relax the requirements in recognition of the lower energy consumption of these structures due to their occasional / seasonal use. The change proposed at this time would smooth the U-factor requirements since the previous change left the requirements discontinuous by requiring a lower U-factor in Climate Zones 2 and 3 than in the higher climate zones, which does not make sense. This change would set the U-factor requirements the same for all the climate zones where requirements exist, and would correct the discontinuity in the code between the requirements in Climate Zones 2, 3 and 4.

The proposal also seeks to set relaxed SHGC requirements for thermally isolated sunrooms in Climate Zones 1 through 3 because there is no practical way for the typically larger glazing used in sunrooms to meet the lower SHGC values prescribed by Table R402.1.1 unless very dark glass is used. Consumers purchase sunrooms to create a comfortable enclosed area that provides a view of the outdoors. Extremely dark glass is contrary to the very purpose of a sunroom.

Cost Impact: The proposed change would not increase the cost of construction.

RE68-13

Public Hearing:	Committee:	AS	AM	D
	Assembly:	ASF	AMF	DF

R402.3.5-EC-WALKER

RE69-13
R402.3.6 (N1102.3.6)

Proponent: Dr. Thomas D. Culp, Birch Point Consulting LLC, representing the Glazing Industry Code Committee (culp@birchpointconsulting.com)

Revise as follows:

R402.3.6 (N1102.3.6) Replacement fenestration. Where some or all of an existing fenestration unit is replaced with a new fenestration product, including sash and glazing, the replacement fenestration unit shall meet the applicable requirements for *U*-factor and SHGC in Table R402.1.1.

> **Exception:** In Climate Zones 1-3, replacement of up to 75 square feet (7.0 m^2) of vertical fenestration with a maximum SHGC of 0.35.

Reason: The 2012 IECC significantly lowered the SHGC requirement down to 0.25 in zones 1-3. This necessitates the use of different low-e coatings, tinted glass, or both. As a result, windows meeting the 2012 IECC will have a different appearance than previous windows. This may not be an issue for new construction where all the windows use the same glazing product, but one concern for replacement windows is that the 0.25 SHGC requirement could inhibit homeowners from replacing older inefficient windows, because the new 0.25 SHGC requirement would result in a mismatched appearance between the new replacement windows/doors and the rest of the windows.

Even with the newest low-e coatings (known as triple silver coatings), the visible light transmittance will still be approximately 8% lower than other low-e coatings, and equally important, the reflected light and color will be different. Furthermore, even with these coatings, it is borderline whether 0.25 SHGC can be achieved for certain products without the addition of tinted glass or a darker low-e, especially for picture windows and sliding glass doors that have a larger glass to frame ratio.

The California Energy Commission recognized this problem, and not wanting to discourage replacement of older less efficient windows, they created an allowance in the recently developed criteria for Title 24 that allows 0.35 SHGC for up to 75 ft2 of vertical fenestration (Title 24-2013, Exception 1 to Section 150.2(b)1B). This is a limited exception that will allow the use of low-e coatings that better match existing windows and remove a barrier to window replacement, while still providing a low SHGC for energy efficient solar control.

Cost Impact: The code change proposal will lower the cost of construction.

RE69-13

Public Hearing:	Committee:	AS	AM	D
	Assembly:	ASF	AMF	DF

R402.3.6-EC-CULP

RE70 – 13
R402.3.6 (NEW) (IRC N1102.3.6 (NEW)), R402.2.13 (NEW) (IRC N1102.2.13 (NEW)

Proponents: Ellen Eggerton, representing Virginia Building and Code Officials Association; Harold A Stills, Jr., Hanover County, VA.., representing Virginia Building and Code Officials Association (hastills@hanovercounty.gov)

Add new text as follows:

R402.3.6 (N1102.3.6) Thermally isolated garage door *R-value*. For Climate Zones 4 through 8, when the garage is conditioned, the minimum garage door *R-value* shall be 5.0. All other fenestration shall meet the *building thermal envelope* requirements.

R402.2.13 (N1102.2.13) Thermally isolated garage insulation. All garages shall be thermally isolated and meet ceiling and wall *R*-values as specified in Table R402.1.1. Existing slabs shall be exempt from insulation requirements.

Reason: Eggerton: The current IECC does not allow for the average garage to be conditioned because the average garage door cannot meet the 0.35 U-factor. In addition, it is very difficult to find a garage door that has been tested according to "NFRC 100" (R303.1.3). If one searches for doors at an average big-box home improvement store, it is not difficult to find an insulated garage door with an R-6 or greater R-value.

A garage is not considered "habitable space", but some activities, (such as automobile and household item repair) do occur there. These activities do not require the same level of comfort as the habitable areas of the dwelling, but a temperature other than the current outdoor temperature may be desirable. The average homeowner also realizes that it would not be efficient to maintain this space at the same temperature as the rest of the dwelling.

The last sentence of 402.2.13 recognizes that adding a heating or cooling mechanical system to an existing garage would be acceptable after adding the required insulation to the walls and ceiling, but impractical to add slab insulation. However, ice-melting systems are allowed.

Stills: The current IECC does not allow for the average garage to be conditioned because the average garage door cannot meet the 0.35 U-factor. In addition, it is very difficult to find a garage door that has been tested according to "NFRC 100" (R303.1.3). If one searches for doors at an average big-box home improvement store, it is not difficult to find an insulated garage door with an R-6 or greater R-value. However, ice-melting systems are allowed. A garage is not considered "habitable space", but some activities, (such as automobile and household item repair) do occur there. These activities do not require the same level of comfort as the habitable areas of the dwelling, but a temperature other than the current outdoor temperature may be desirable. The average homeowner also realizes that it would not be efficient to maintain this space at the same temperature as the rest of the dwelling. The last sentence of R402.2.13 recognizes that adding a mechanical system to an existing garage would be acceptable after adding the required insulation to the walls and ceiling, but impractical to add slab insulation.

Cost Impact: The code change proposal will not increase the cost of construction.

RE70-13

Public Hearing:	Committee:	AS	AM	D
	Assembly:	ASF	AMF	DF

R402.3.6 (NEW)-EC-EGGERTON-STILLS

RE71-13

R402.4 (IRC N1102.4), R402.4.1.1 (IRC N1102.4.1.1), R402.4.1.2 (IRC N1102.4.1.2), R402.4.1.3 (NEW) (IRC N1102.4.1.3 NEW), R403.2.2 (IRC N1103.2.2), R403.2.2.1 (NEW) (IRC N1103.2.2.1 NEW), R403.2.2.2 (NEW) (IRC N1103.2.2.2 NEW), R403.2.2.3 (NEW) (IRC N1103.2.2.3), Table 405.5.2(1) (IRC Table N1105.5.2(1))

Proponent: Dan Buuck, representing National Association of Home Builders (NAHB) (dbuuck@nahb.org)

Revise as follows:

R402.4 (N1102.4) Air leakage ~~(Mandatory)~~. The building thermal envelope shall be constructed to limit air leakage in accordance with the requirements of Sections R402.4.1 through R402.4.4.

R402.4.1.1 (N1102.4.1.1) Installation (Mandatory). The components of the *building thermal envelope* as listed in Table R402.4.1.1 shall be installed in accordance with the manufacturer's instructions and the criteria listed in Table R402.4.1.1, as applicable to the method of construction. Where required by the *code official*, an *approved* third party shall inspect all components and verify compliance.

R402.4.1.2 (N1102.4.1.2) Testing (Mandatory). The building or dwelling unit shall be tested ~~and verified as having an air leakage rate of not exceeding 5 air changes per hour in Climate Zones 1 and 2, and 3 air changes per hour in Climate Zones 3 through 8~~for air leakage. Testing shall be conducted with a blower door at a pressure of 0.2 inches w.g. (50 Pascals). Where required by the *code official*, testing shall be conducted by an *approved* third party. A written report of the results of the test shall be signed by the party conducting the test and provided to the *code official*. Testing shall be performed at any time after creation of all penetrations of the *building thermal envelope*. During testing:

1. Exterior windows and doors, fireplace and stove doors shall be closed, but not sealed, beyond the intended weatherstripping or other infiltration control measures;
2. Dampers including exhaust, intake, makeup air, backdraft and flue dampers shall be closed, but not sealed beyond intended infiltration control measures;
3. Interior doors, if installed at the time of the test, shall be open;
4. Exterior doors for continuous ventilation systems and heat r, ecovery ventilators shall be closed and sealed;
5. Heating and cooling systems, if installed at the time of the test, shall be turned off; and
6. Supply and return registers, if installed at the time of the test, shall be fully open.

R402.4.1.3 (N1102.4.1.3) Leakage rate (Prescriptive). The building or dwelling unit shall have an air leakage rate not exceeding 5 air changes per hour in Climate Zones 1 and 2, and 3 air changes per hour in Climate Zones 3 through 8, when tested in accordance with Section R402.4.1.2.

R403.2.2 (N1103.2.2) Sealing ~~(Mandatory)~~. ~~Ducts, air handlers, and filter boxes shall be sealed. Joints and seams shall comply with either the International Mechanical Code or International Residential Code, as applicable.~~

~~**Exceptions:**~~

1. ~~Air-impermeable spray foam products shall be permitted to be applied without additional joint seals.~~
2. ~~Where a duct connection is made that is partially inaccessible, three screws or rivets shall be equally spaced on the exposed portion of the joint so as to prevent a hinge effect.~~
3. ~~Continuously welded and locking-type longitudinal joints and seams in ducts operating at static pressures less than 2 inches of water column (500 Pa) pressure classification shall not require additional closure systems.~~

~~Duct tightness shall be verified by either of the following:~~

1. ~~Postconstruction test: Total leakage shall be less than or equal to 4 cfm (113.3 L/min) per 100 square feet (9.29 m2) of conditioned floor area when tested at a pressure differential of 0.1 inches w.g. (25 Pa) across the entire system, including the manufacturer's air handler enclosure. All register boots shall be taped or otherwise sealed during the test.~~
2. ~~Rough-in test: Total leakage shall be less than or equal to 4 cfm (113.3 L/min) per 100 square feet (9.29 m2) of conditioned floor area when tested at a pressure differential of 0.1 inches w.g. (25 Pa) across the system, including the manufacturer's air handler enclosure. All registers shall be taped or otherwise sealed during the test. If the air handler is not installed at the time of the test, total leakage shall be less than or equal to 3 cfm (85 L/min) per 100 square feet (9.29 m2) of conditioned floor area.~~

~~**Exception**: The total leakage test is not required for ducts and air handlers located entirely within the building thermal envelope.~~

R403.2.2.1 (N1103.2.2.1) Construction (Mandatory). Ducts, air handlers, and filter boxes shall be sealed. Joints and seams shall comply with either the International Mechanical Code or International Residential Code, as applicable.

Exceptions:

1. Air-impermeable spray foam products shall be permitted to be applied without additional joint seals.
2. Where a duct connection is made that is partially inaccessible, three screws or rivets shall be equally spaced on the exposed portion of the joint so as to prevent a hinge effect.
3. Continuously welded and locking-type longitudinal joints and seams in ducts operating at static pressures less than 2 inches of water column (500 Pa) pressure classification shall not require additional closure systems.

R403.2.2.2 (N1103.2.2.2) Duct testing (Mandatory). Ducts shall be pressure tested for air leakage by either of the following methods:

1. Postconstruction test: Total leakage shall be measured when tested at a pressure differential of 0.1 inches w.g. (25 Pa) across the entire system, including the manufacturer's air handler enclosure. All register boots shall be taped or otherwise sealed during the test.
2. Rough-in test: Total leakage shall be measured when tested at a pressure differential of 0.1 inches w.g. (25 Pa) across the system, including the manufacturer's air handler enclosure if present at the time of the test. All registers shall be taped or otherwise sealed during the test.

   Exception: The total leakage test is not required for ducts and air handlers located entirely within the building thermal envelope.

A written report of the results of the test shall be signed by the party conducting the test and provided to the *code official*.

R403.2.2.3 (N1103.2.2.3) Duct leakage (Prescriptive). Total leakage of the ducts, when measured in accordance with Section R403.2.2.2, shall be as follows:

1. Postconstruction test: Total leakage shall be less than or equal to 4 cfm (113.3 L/min) per 100 square feet (9.29 m2) of conditioned floor area.
2. Rough-in test: Total leakage shall be less than or equal to 4 cfm (113.3 L/min) per 100 square feet (9.29 m2) of conditioned floor area if the air handler is present at the time of the test, or 3 cfm

(85 L/min) per 100 square feet (9.29 m2) of conditioned floor area if the air handler is not present at the time of the test.

Exception: No maximum duct leakage rate is required when ducts and air handlers are located entirely within the building thermal envelope.

TABLE R405.5.2(1) (N1105.5.2(1))
SPECIFICATIONS FOR THE STANDARD REFERENCE AND PROPOSED DESIGNS

BUILDING COMPONENT	STANDARD REFERENCE DESIGN	PROPOSED DESIGN
Glazing[a]	Total area[b] = ~~(a) The proposed glazing area; where proposed glazing area is less than 15% of the conditioned floor area.~~ ~~(b)~~ 15% of the conditioned floor area~~; where the proposed glazing area is 15% or more of the conditioned floor area.~~ Orientation: equally distributed to four cardinal compass orientations (N, E, S, & W) U-factor: from Table R402.1.3 SHGC: From Table R402.1.1 except that for climates with no requirement (NR) SHGC = 0.40 shall be used. Interior shade fraction: 0.92-(0.21 × SHGC for the standard reference design) External shading: none	As proposed As proposed As proposed As proposed 0.92-(0.21 × SHGC as proposed) As proposed
Heating systems [f, g]	~~As proposed for other than electric heating without a heat pump, Where the proposed design utilizes electric heating without a heat pump the standard reference design shall be an air source heat pump meeting the requirements of Section R403 of the IECC-Commercial Provisions.~~ Fuel type: same as proposed design Efficiencies: Electric: air-source heat pump with prevailing federal minimum standards Nonelectric furnaces: natural gas furnace with prevailing federal minimum standards Nonelectric boilers: natural gas boiler with prevailing federal minimum standards Capacity: sized in accordance with Section R403.6	As proposed As proposed As proposed As proposed As proposed
Cooling systems [f,h]	~~As proposed~~ Fuel type: Electric Efficiency: in accordance with prevailing federal minimum standards Capacity: sized in accordance with Section R403,6	As proposed As proposed

Service Water Heating [f,g,h,i]	~~As proposed~~ Fuel type: same as proposed design Efficiency: in accordance with prevailing federal minimum standards Use: gal/day = 30 + 10 × *Nbr* Tank temperature: 120°F ~~Use: same as proposed design~~	As proposed As proposed Same as standard reference Same as standard reference ~~gal/day = 30 + (10 × *Nbr*)~~
Thermal distribution systems	Untested distribution systems: DSE = 0.88 Tested Ducts: Leakage rate to outside conditioned space as specified Section R403.2.2(1) Duct Location: Unconditioned attic Duct Insulation: Per Section R403.2.1	~~Thermal distribution system efficiency shall be as tested or as specified in Table R405.5.2(2) if not tested. Duct insulation shall be as proposed.~~ Untested distribution systems: DSE from Table R405.5.2(2) Tested Ducts: Tested Leakage rate to outside conditioned space Duct Location: As proposed Duct Insulation: As proposed

(Portions of Table not shown remain unchanged)

Reason: This amendment is a comprehensive proposal which provides flexibility for meeting the energy code requirements while maintaining the energy performance. It will provide a "true" unrestricted performance path that will allow for cost optimized construction of an energy equivalent house. The proposed changes provide alternatives that encourage innovation and the use of materials and equipment which will result in a home which is at least equivalent of that prescribed in the energy code.

The modifications will reinstate many of the changes made since the 2006 IECC which restricted the flexibility of the builder/designer to construct an energy efficient code compliant home while still meeting the energy performance levels of the current code.

Items included in this proposal:

- Energy neutral building tightness trade-offs
- Energy neutral duct tightness trade-offs
- Credit for more energy efficient buildings which incorporate reduced window area
- Energy neutral heating, cooling and water heating equipment efficiency trade-offs

Currently all homes have a mandatory requirement to be equal to or tighter than 3ACH50 or 5ACH50, depending on climate zone. Proposed changes will allow for homes to be less tight provided other efficiency changes are made to the house which offset energy lost due to the change in air infiltration.

Duct tightness requirements are similar to that of the entire building where all ducts must be equal to or tighter than 4 CFM25/100 CFA. Changes in this proposal will also allow for energy neutral tradeoffs for duct tightness.

Currently, when conducting a performance analysis, a building glazing area greater than 15% of the conditioned floor area (CFA) is penalized for using more energy. However, a building with less than 15% window to CFA does not get credit for saving energy. This proposal allows the builder/designer to optimize window area that is both energy efficient and pleasing to the consumer.

Cost Impact: The code change proposal will not increase the cost of construction.

RE71-13

Public Hearing: Committee: AS AM D
Assembly: ASF AMF DF

R402.4-EC-BUUCK

RE72 – 13

R402.4 (IRC N1102.4), R402.4.1.1 (IRC N1102.4.1.1), R402.4.1.2 (IRC N1102.4.1.2), R402.4.1.3 (NEW) (IRC N1102.4.1.3 (NEW))

Proponents: Craig Conner, Building Quality, representing self (craig.conner@mac.com); Don Surrena, CBO, representing National Association of Home Builders (NAHB) (dsurrena@nahb.org)

Revise as follows:

R402.4 (N1102.4) Air leakage ~~(Mandatory)~~. The building thermal envelope shall be constructed to limit air leakage in accordance with the requirements of Sections R402.4.1 through R402.4.4.

R402.4.1.1 (N1102.4.1.1) Installation (Mandatory). The components of the *building thermal envelope* as listed in Table R402.4.1.1 shall be installed in accordance with the manufacturer's instructions and the criteria listed in Table R402.4.1.1, as applicable to the method of construction. Where required by the *code official*, an *approved* third party shall inspect all components and verify compliance.

R402.4.1.2 (N1102.4.1.2) Testing (Mandatory). The building or dwelling unit shall be tested ~~and verified as having an air leakage rate of not exceeding 5 air changes per hour in Climate Zones 1 and 2, and 3 air changes per hour in Climate Zones 3 through 8~~for air leakage. Testing shall be conducted with a blower door at a pressure of 0.2 inches w.g. (50 Pascals). Where required by the *code official*, testing shall be conducted by an *approved* third party. A written report of the results of the test shall be signed by the party conducting the test and provided to the *code official*. Testing shall be performed at any time after creation of all penetrations of the *building thermal envelope*. During testing:

1. Exterior windows and doors, fireplace and stove doors shall be closed, but not sealed, beyond the intended weatherstripping or other infiltration control measures;
2. Dampers including exhaust, intake, makeup air, backdraft and flue dampers shall be closed, but not sealed beyond intended infiltration control measures;
3. Interior doors, if installed at the time of the test, shall be open;
4. Exterior doors for continuous ventilation systems and heat recovery ventilators shall be closed and sealed;
5. Heating and cooling systems, if installed at the time of the test, shall be turned off; and
6. Supply and return registers, if installed at the time of the test, shall be fully open.

R402.4.1.3 (N1102.4.1.3) Leakage rate (Prescriptive). The building or dwelling unit shall have an air leakage rate not exceeding 5 air changes per hour in Climate Zones 1 and 2, and 3 air changes per hour in Climate Zones 3 through 8, when tested in accordance with Section R402.4.1.2.

Reason: Conner: This is exactly the online draft DOE posted. It makes the duct tightness tradable. DOE's posted reason statement said it well:

> *"Changing the envelope air leakage rate from mandatory to prescriptive will allow builders the option of trading improvements in other building components for less stringent pressure test results. This provides flexibility in meeting the requirements and options for recovering from an unexpected test failure. The proposed change retains a mandatory pressure test and leaves all other aspects of envelope sealing mandatory".*

Surrena: These modifications remove the mandatory maximum air tightness requirement and provide designers and builders the flexibility to trade-off building tightness with other performance path measures when using the performance path. Currently the building tightness requirement is mandatory and the 3 and 5 ACH tightness levels even under ideal circumstances, are very difficult to achieve. This will provide energy neutral trade-offs for expensive and sometimes unattainable requirements with other building improvements. This proposal does not change the stringency of the code it only increases the flexibility.

Cost Impact: The code change proposal will not increase the cost of construction.

RE72-13

Public Hearing:	Committee:	AS	AM	D
	Assembly:	ASF	AMF	DF

R402.4-EC-CONNER-SURRENA

RE73 – 13

R402.4 (IRC N1102.4), R402.4.1 (IRC N1102.4.1), R402.4.1.1 (IRC N1102.4.1.1), R402.4.1.2 (IRC N1102.4.1.2), R402.4.1.3 (NEW) (IRC N1102.4.1.3 (NEW)), R402.4.2 (IRC N1102.4.2), R402.4.3 (IRC N1102.4.3), R402.4.4 (IRC N1102.4.4)

Proponent: Brian Dean, Energy Efficient Codes Coalition; Garrett Stone, Brickfield Burchette Ritts & Stone, PC; Jeff Harris, Alliance to Save Energy; Harry Misuriello, American Council for an Energy-Efficient Economy; and Bill Prindle, Energy Efficient Codes Coalition

Revise as follows:

R402.4 (N1102.4) Air leakage ~~(Mandatory)~~. The building thermal envelope shall be constructed to limit air leakage in accordance with the requirements of Sections R402.4.1 through R402.4.4.

R402.4.1 (N1102.4.1) Building thermal envelope. The *building thermal envelope* shall comply with Sections R402.4.1.1 ~~and R402.4.1.2~~ through R402.4.1.3. ~~The sealing methods between dissimilar materials shall allow for differential expansion and contraction.~~

R402.4.1.1 (N1102.4.1.1) Installation (Mandatory). The components of the *building thermal envelope* as listed in Table R402.4.1.1 shall be installed in accordance with the manufacturer's instructions and the criteria listed in Table R402.4.1.1, as applicable to the method of construction. The sealing methods between dissimilar materials shall allow for differential expansion and contraction. Where required by the *code official*, an *approved* third party shall inspect all components and verify compliance.

R402.4.1.2 (N1102.4.1.2) Testing (Mandatory). The building or dwelling unit shall be tested for air leakage ~~and verified as having an air leakage rate of not exceeding 5 air changes per hour in Climate Zones 1 and 2, and 3 air changes per hour in Climate Zones 3 through 8~~. Testing shall be conducted with a blower door at a pressure of 0.2 inches w.g. (50 Pascals)~~. Where required by the *code official*, testing shall be conducted~~ by an *approved* third party. A written report of the results of the test shall be signed by the party conducting the test and provided to the *code official*. Testing shall be performed at any time after creation of all penetrations of the *building thermal envelope*.

During testing:

1. Exterior windows and doors, fireplace and stove doors shall be closed, but not sealed, beyond the intended weatherstripping or other infiltration control measures;
2. Dampers including exhaust, intake, makeup air, backdraft and flue dampers shall be closed, but not sealed beyond intended infiltration control measures;
3. Interior doors, if installed at the time of the test, shall be open;
4. Exterior doors for continuous ventilation systems and heat recovery ventilators shall be closed and sealed;
5. Heating and cooling systems, if installed at the time of the test, shall be turned off; and
6. Supply and return registers, if installed at the time of the test, shall be fully open.

R402.4.1.3 (N1102.4.1.3) Leakage rate (Prescriptive). The *building* or *dwelling unit* shall have an air leakage rate that does not exceed 5 air changes per hour in Climate Zones 1 and 2, and 3 air changes per hour in Climate Zones 3 through 8, when tested in accordance with Section R402.4.1.2.

R402.4.2 (N1102.4.2) Fireplaces (Mandatory). New wood-burning fireplaces shall have tight-fitting flue dampers and outdoor combustion air.

R402.4.3 (N1102.4.3) Fenestration air leakage (Mandatory). Windows, skylights and sliding glass doors shall have an air infiltration rate of no more than 0.3 cfm per square foot (1.5 L/s/m^2), and swinging doors no more than 0.5 cfm per square foot (2.6 L/s/m^2), when tested according to NFRC 400 or

AAMA/WDMA/CSA 101/I.S.2/A440 by an accredited, independent laboratory and *listed* and *labeled* by the manufacturer.

Exception: Site-built windows, skylights and doors.

R402.4.4 (N1102.4.4.) Recessed lighting (Mandatory). Recessed luminaires installed in the *building thermal envelope* shall be sealed to limit air leakage between conditioned and unconditioned spaces. All recessed luminaires shall be IC-rated and *labeled* as having an air leakage rate not more than 2.0 cfm (0.944 L/s) when tested in accordance with ASTM E 283 at a 1.57 psf (75 pa) pressure differential. All recessed luminaires shall be sealed with a gasket or caulk between the housing and the interior wall or ceiling covering.

Reason: The purpose of this code change is to clarify the code language related to air leakage, modify certain requirements, including changing a mandatory air leakage value to prescriptive and to require all necessary testing to be done by an approved third party. By changing the allowable tested air leakage rate from "mandatory" to "prescriptive," this proposal would allow air leakage to be part of the tradeoff calculation under section R405 performance trade-offs. The result will maintain energy efficiency, while providing increased flexibility to the builder and an alternative path for cases in which a building fails the air leakage test or where achieving a low air leakage rate would be too difficult. This is an important consideration where the on-site testing requirement is already set at a tight level.

This proposal also adds objectivity and transparency by requiring that all required air leakage testing be administered by a code-official-approved third party. This proposal also reorganizes Section R402.4 to add clarity and simplicity to the code. However, it should be noted that this proposal does not change or tighten required values for tested air leakage, which were initially set in the 2012 *IECC*.

Cost Impact: The code change proposal will increase the cost of construction.

RE73-13

Public Hearing:	Committee:	AS	AM	D
	Assembly:	ASF	AMF	DF

R402.4-EC-DEAN-HARRIS-MISURIELLO-PRINDLE-STONE

RE74 – 13
R402.4 (IRC N1102.4)

Proponent: Eric Makela, Britt/Makela Group, Inc., representing Northwest Energy Codes Group (Eric@BrittMakela.com)

Revise as follows:

R402.4 (N1102.4) Air Leakage (Mandatory). The building thermal envelope shall be constructed to limit air leakage in accordance with the requirements of Sections R402.4.1 through R402.4.4. The building design shall not create conditions of accelerated deterioration from moisture condensation.

Reason: The 2006 IECC Section 502.1.1 Moisture Control provided language that states that "the design shall not create conditions of accelerated deterioration from moisture condensation". This language was removed from the code in as part of the development of the residential provisions of the 2006 IECC when the requirements for vapor retarders were moved to the International Residential Code. This language was not moved with the vapor retarder language to the detriment of portions of the building. The removal of this language has created problems in cold climates including condensation on rim joists. Air permeable insulation installed in rim joists allows warm air movement through the insulation which can then condense when coming in contact with the cold rim joist causing mold to grow. Adding back in the language "The building design shall not create conditions of accelerated deterioration from moisture condensation" will allow the code official to require air impermeable insulation to insulate the rim joists if a potential problem is identified. Water damage and mold are common occurrences in colder climates where batt insulation is allowed to be installed on rim joists and the band joist is used as the air barrier on the exterior of the wall. Because moisture condensation is a direct result of this type of installation it is important to bring the language back into the code in order to mitigate the problem.

Cost Impact: The code change proposal will not increase the cost of construction.

RE74-13

Public Hearing:	Committee:	AS	AM	D
	Assembly:	ASF	AMF	DF

R402.4-EC-MAKELA

RE75 – 13
R402.4 (IRC N1102.4)

Proponent: Don Surrena, CBO, representing National Association of Home Builders (NAHB) (dsurrena@nahb.org)

Revise as follows:

R402.4 (N1102.4) Air leakage (Mandatory). The building thermal envelope shall be constructed to limit air leakage in accordance with the requirements of Section R402.4.1 through R402.4.4.

Exception: Dwelling units of R-2 Occupancies shall be permitted to comply with Section C402.4

Reason: Air tightness testing for single family homes is very straightforward; however, it is much more difficult to accurately test multi-family buildings. Currently the code treats low-rise multi-family buildings, which are 3 stories or less, like single family homes and multi-family buildings of 4 stories or more like commercial buildings. Regardless of height, all multi-family buildings have the same air tightness testing complications, such as: Does the entire building need to be tested at one time? What about multi-family buildings with open corridors? Does every dwelling need to be tested? Can the leakages be averaged between units? Is the leakage tested only to the "outside" or should it include leakage to adjacent units?

By approving this change, low-rise multi-family buildings will avoid these complications, but yet will still held to the same level of performance as high rise (R-2) residential building as well as all commercial buildings.

Cost Impact: The code change proposal will not increase the cost of construction.

Analysis. This exception will not appear in Chapter 11 of the IRC, since it is not applicable to the IRC.

RE75-13

Public Hearing:	Committee:	AS	AM	D
	Assembly:	ASF	AMF	DF

R402.4 #1-EC-SURRENA

RE76 – 13

R402.2 (IRC N1102.2), R402.2.1 (NEW) (IRC N1102.2.1 (NEW)), Table R402.4.1.1 (NEW) (IRC Table N1102.4.1.1 (NEW))

Proponent: Proponent: Eric Makela, Britt/Makela Group, Inc., representing Northwest Energy Codes Group (Eric@BrittMakela.com); Jim Meyers, Southwest Energy Efficiency Partnership; Robby Schwarz, Energy Logic

Revise as follows:

R402.2 (N1102.2) Specific insulation requirements (Prescriptive). In addition to the requirements of Section R402.1, insulation shall meet the specific requirements of Sections R402.2.1 through R402.2.12. Insulation shall also be installed in accordance with Table R402.4.1.1.

R402.2.1 (N1102.2.1) Insulation installation requirements (Mandatory). Insulation shall be installed in accordance with Table R402.4.1.1.

Delete Table R402.4.1.1 in its entirety and replace with new Table R402.4.1.1

TABLE R402.4.1.1 (N1102.4.1.1)
AIR BARRIER AND INSULATION INSTALLATION

COMPONENT	AIR BARRIER CRITERIA[a]	INSULATION INSTALLATION CRITERIA
General Requirements	A continuous air barrier shall be installed in the buildings thermal envelope and be in alignment with the insulation. Air permeable cavity insulation shall be installed in a six sided assembly. Breaks or joints in the air barrier shall be sealed with an air impermeable material to ensure that the air barrier system is impermeable to air movement. Air barriers shall be constructed and mechanically fastened to framing and sealed at edges, gaps, or voids with air sealing materials that are appropriate to the construction materials being sealed.	Air-permeable insulation shall not be used as a sealing material. Exterior thermal envelope insulation for framed walls and floors is installed in substantial contact and continuous alignment with building envelopes interior air barrier.
Ceiling / attic	The air barrier in any dropped ceiling/soffit shall be aligned with the insulation and any gaps in the air barrier shall be sealed. Access openings, drop down stair or knee wall doors to unconditioned attic spaces shall be sealed. An air barrier at the drywall conditioned space and a ventilated attic is required	In any insulated ceiling or dropped ceiling/soffit, the insulation is substantially aligned with the air barrier.
Walls	The junction of the foundation and sill plate shall be sealed. The drywall junction at the top plate of interior and exterior walls separating conditioned space from ventilated attic space shall be sealed. Wall cavity insulation, including knee walls adjacent to attics, shall be encapsulated on	Corners, headers, and interior wall intersections shall be insulated to a minimum of R-5. The insulation shall be installed according to manufacturer's instructions and/or industry standards which requires that the insulation material uniformly fills each cavity side-to-side, top-to-bottom, and without substantial gaps or voids.

COMPONENT	AIR BARRIER CRITERIA[a]	INSULATION INSTALLATION CRITERIA
	six sides by an interior and exterior air barrier system The junction of the bottom plate of the exterior wall and floor sheathing shall be sealed.	No exterior sheathing shall be visible from the building interior through gaps in the cavity insulation material. Wall and floor cavity insulation shall be enclosed on all six sides, and shall be in substantial contact with the sheathing material of the surface it is intended to insulate. For exterior applications of rigid insulation, insulation shall be in firm contact with the structural sheathing materials, and tightly fitted and sealed at joints. Faced batt insulation shall be surface stapled or inset stapled as long as inset stapled tabs are stapled neatly (no buckling), and provided the batt is only compressed at the edges of each cavity, to the depth of the tab itself. For sprayed or blown-in fibrous products, density shall be installed to the proper density to achieve the required R-value of the cavity it is installed in.
Windows, skylights and doors	The space between window/door jambs and framing and skylights and framing shall be sealed.	Comply with narrow cavity requirements
Rim joists	The rim or band joists shall be sealed at all edges, cracks, and gaps and must have an exterior air barrier	
Floors (including above garage and cantilevered floors)	Floors shall encapsulate the cavity insulation on six sides by an interior and exterior air barrier system. The air barrier shall be sealed at all exposed edge/sides including connections between the house floor system and the floor system above unconditioned space.	Floor insulation shall be held in permanent contact with the underside of the subfloor decking and shall not be overly compressed by components that are used to hold it in place so that R-value is lost. Where an obstruction such as a duct or piping is installed in the floor cavity the insulation shall continue to be held in permanent contact with the underside of the subfloor decking, shall encapsulate the obstruction, and a minimum of an R- 19 shall be installed below the obstruction.
Crawl space walls	Exposed earth in unvented crawl spaces shall be covered with a Class I vapor retarder with overlapping joints sealed and edges sealed to the foundation walls and footings.	Where provided in lieu of floor insulation, insulation shall be permanently attached to the crawlspace walls and extend from the vapor barrier covering the dirt floor to the sill attached to the top of the foundation. Where the floor system between the house and the crawl space is insulated it must conform with the floor insulation requirement described above.
Shafts, penetrations	Duct shafts, utility penetrations, wiring penetrations, plumbing penetrations, gas line penetrations, and flue shafts or other similar penetrations through the building envelope shall be sealed.	Insulation shall not extend through draft-stopping or fire-stopping openings. Use caulking rated for the application
Narrow cavities	Cavities too small to insulate, shall be sealed with an air barrier material.	Batts in narrow cavities shall be cut to fit, or narrow cavities shall be filled by insulation that on installation readily conforms to the available cavity space.

COMPONENT	AIR BARRIER CRITERIA[a]	INSULATION INSTALLATION CRITERIA
Garage separation	Air sealing shall be provided between the garage and conditioned spaces.	
Recessed lighting	Recessed light fixtures installed in the building thermal envelope shall be air tight and sealed to the drywall.	Recessed light fixtures installed in the building thermal envelope shall be air tight, IC rated.
Plumbing and wiring	All plumbing, ductwork and wiring air barrier penetrations shall be sealed.	Batt insulation shall be cut neatly to fit around obstructions (such as blocking or bridging), and split, installed, and/or fitted tightly around wiring, plumbing, ducting, and other services in the cavity, or insulation that on installation readily conforms to available space shall encapsulate any obstruction in the cavity.
Shower / tub on exterior wall	Exterior walls adjacent to shower stalls, shower pans, and tubs shall have an air barrier installed separating conditioned space and exterior wall insulation. Tub and shower drain trap penetrations through the subfloor shall be sealed with an air barrier material.	Exterior walls adjacent to showers and tubs shall be insulated.
Electrical / phone box on exterior walls	Electrical, communication, or other boxes located in exterior walls, ceilings, or floors shall be air tight boxes or shall be made to be air tight using air barrier material's Bath fan housing adjacent to and or installed in unconditioned spaces shall be sealed to the drywall and made air tight.	Insulation completely fills voids between the box and exterior sheathing
HVAC register boots	HVAC register boots that penetrate building thermal envelope shall be sealed to the subfloor or drywall.	
Fireplace	Exterior walls adjacent to fireplace enclosures shall have an air barrier installed encapsulating and separating interior conditioned space and exterior wall insulation. Fireplaces shall have tight fitting doors	Exterior walls adjacent to fireplaces shall be insulated.

a. In addition, inspection of log walls shall be in accordance with the provisions of ICC-400.

Reason: Manufacturer instructions, best building practices, DOE's Building America program, Building Energy Code Programs, and other building educators all propose installing products and materials with best building practices and according to manufacturer instructions. However few go further than the code book to learn what best practices and manufactured instructions are. The intent of this new language is to clearly define air barrier and insulation requirements and installation practices that will lead to houses that can easily meet the air leakage standards of the energy code and ensure the performance of the stalled insulation materials.

The 2012 IECC also requires that insulation be installed correctly in order to comply with the air barrier requirements of the IECC. While it is important to install insulation correctly, this type of provision should not be linked to air sealing the house. This proposal provides two distinct sections to the table focused on either air sealing or insulation installation. It also provides a reference in the prescriptive requirements for insulation installation to the table.

Field experience shows that some trades continue to seal holes in the buildings enclosure with air permeable insulation, which is not best building practice does not meet manufacturers' intents for the use of their products.

When the 2009 IECC was released many code officials were introduced to the importance of air barriers and are still struggling to understand where and how an air barrier is integral to the building enclosure. This new language will better prepare trades, builders, and code officials with how and where air barriers should be installed. The quality of the installation and enforcement should increase due to greater clarity and specificity.

The air barrier and insulation table included in the 2009 and 2012 IECC do not require a minimum level of insulation for corners and headers. The new requirement specifies a minimum insulation value and also includes interior wall intersections that also reduce the possibility for full wall insulation in these areas of the building.

Field practice has found kneewalls that are not enclosed on the exterior (attic) vertical plane exhibit more air infiltration and provide the opportunity for insulation to fall away from kneewalls over time reducing the efficiency of the overall building.

Other field practices observed by raters include excessive compression of tabbed insulation batts when stapling the tabs to the side of the stud. This reduces insulation values and does not comply with manufacturer instructions. By adding this language to the table, insulation trades and others who install insulation will have a simplified description for installing batts and inset stapling.

Cost Impact: The code change proposal will not increase the cost of construction.

RE76-13

Public Hearing:	Committee:	AS	AM	D
	Assembly:	ASF	AMF	DF

R402.2-EC-MAKELA-MEYERS-SCHWARZ

RE77 – 13
Table R402.4.1.1 (IRC Table N1102.4.1.1)

Proponent: Brian Dean, Energy Efficient Codes Coalition; Garrett Stone, Brickfield Burchette Ritts & Stone, PC; Jeff Harris, Alliance to Save Energy; Harry Misuriello, American Council for an Energy-Efficient Economy; and Bill Prindle, Energy Efficient Codes Coalition

Revise as follows:

TABLE R402.4.1.1 (N1102.4.1.1)
AIR BARRIER AND INSULATION INSTALLATION INSPECTION

COMPONENT	~~CRITERIA[a]~~	AIR BARRIER CRITERIA[a]	INSULATION INSTALLATION CRITERIA[a]
General Requirements ~~Air barrier and thermal barrier~~	~~A continuous air barrier shall be installed in the building envelope.~~ ~~Exterior thermal envelope contains continuous air barrier.~~ ~~Breaks or joints in the air barrier are sealed.~~ ~~Air-permeable insulation shall not be used as a sealing material.~~	A continuous air barrier shall be installed in the *building thermal envelope*. Breaks or joints in the air barrier are sealed. Air-permeable insulation shall not be used as a sealing material.	Exterior thermal envelope insulation for framed wall shall be installed in substantial contact and continuous alignment with building envelope air barrier.
Ceiling / attic	~~The air barrier in any dropped ceiling / soffit shall be aligned with the insulation and any gaps in the air barrier are sealed.~~ ~~Access openings, drop down stair or knee wall doors to unconditioned attic spaces shall be sealed.~~	Air barrier in any dropped ceiling / soffit shall be substantially aligned with insulation and any gaps shall be sealed. Attic access, knee wall door or drop down stair to unconditioned attic shall be sealed.	In any dropped ceiling/soffit, the insulation shall be substantially aligned with the air barrier.
Walls and Kneewalls	~~Corners and headers shall be insulated and the junction of the foundation and sill plate shall be sealed.~~ ~~The junction of the top plate and top of exterior walls shall be sealed.~~ ~~Exterior thermal envelope insulation for framed walls shall be installed in substantial contact and continuous alignment with the air barrier.~~ ~~Knee wall shall be sealed~~	Junction of foundation and sill plate shall be sealed. Junction of exterior wall and top plate shall be sealed.	Corners and headers shall be insulated. Insulation shall be in substantial contact and continuous alignment with air barrier.
Fenestration ~~Windows, skylights and~~	~~The space between window/door jambs and framing and skylights and~~	Space between fenestration jambs and framing shall be sealed.	

~~doors~~	~~framing shall be sealed~~		
Rim joists	~~Rim joists shall be insulated and include the air barrier~~	Air barrier shall be installed at the rim joist.	Rim joists shall be insulated.
Floors (including above-garage and cantilevered floors)	~~Insulation shall be installed to maintain permanent contact with underside of subfloor decking.~~ ~~The air barrier shall be installed at any exposed edge of insulation.~~	Air barrier shall be installed at any exposed edge of insulation.	Insulation shall be installed in accordance with section R402.2.
Crawl space walls	~~Where provided in lieu of floor insulation, insulation shall be permanently attached to the crawlspace walls.~~ ~~Exposed earth in unvented crawl spaces shall be covered with a Class I vapor retarder with overlapping joints taped.~~	Exposed earth in unvented crawlspaces shall be covered with Class I vapor retarder with overlapping joints taped.	Insulation shall be permanently attached to walls.
Shafts, penetrations	~~Duct shafts, utility penetrations, and flue shafts opening to exterior or unconditioned space shall be sealed.~~	Duct shafts, utility penetrations, knee walls, and flue shafts opening to exterior or unconditioned space shall be sealed.	
Narrow cavities	~~Batts in narrow cavities shall be cut to fit, or narrow cavities shall be filled by insulation that on installation readily conforms to the available cavity space.~~	Air sealing shall be provided in narrow cavities.	Insulation in narrow cavities shall be cut to fit, or shall readily conform to the available cavity space upon installation.
Garage separation	~~Air sealing shall be provided between the garage and conditioned spaces.~~	Air sealing shall be provided between the garage and conditioned spaces.	
Recessed lighting	~~Recessed light fixtures installed in the building thermal envelope shall be airtight, IC rated, and sealed to the drywall.~~	Recessed light fixtures installed in the building thermal envelope shall be airtight, IC rated, and sealed to drywall.	
Plumbing and wiring	~~Batt insulation shall be cut neatly to fit around wiring and plumbing in exterior walls, or insulation that on installation readily conforms to available space shall extend behind piping and wiring.~~	All plumbing and wiring penetrations shall be sealed to the air barrier.	Cavity insulation shall be installed to fit closely around wiring and plumbing in exterior walls, or shall readily conform to the available space around piping

			and wiring.
Shower / tub on exterior wall	~~Exterior walls adjacent to showers and tubs shall be insulated and the air barrier installed separating them from the showers and tubs.~~	Exterior walls adjacent to showers and tubs shall have an air barrier separating the exterior wall from the shower and tubs.	Exterior walls adjacent to showers and tubs shall have insulation filling gaps or voids between tub or shower walls and unconditioned space.
Exterior ~~E~~electrical ~~/ phone~~ boxes ~~on exterior walls~~	~~The air barrier shall be installed behind electrical or communication boxes or air sealed boxes shall be installed.~~	Air barrier shall be installed behind boxes or air sealed boxes shall be installed.	Insulation shall fill voids around and behind the box.
HVAC register boots	~~HVAC register boots that penetrate building thermal envelope shall be sealed to the subfloor or drywall.~~	HVAC register boots that penetrate building envelope shall be sealed to subfloor or drywall.	
Fireplace	~~An air barrier shall be installed on fireplace walls. Fireplaces shall have gasketed doors.~~	Air barrier shall be installed on fireplace walls. Fireplaces shall have gasketed doors.	

a. In addition to meeting the air barrier criteria and the insulation installation criteria in this Table, inspection of log walls shall be in accordance with the provisions of ICC-400.

Reason: The purpose of this code change is to clarify and enhance compliance with and enforcement of the codes by organizing air barrier and insulation installation requirements into two separate checklists in the table. The proposal also updates and improves the language in the table to add clarity and to ensure that crucial elements of the thermal envelope are effectively sealed, installed and verified.

The proper installation of insulation and reasonable control of air leakage are both critical to achieving energy savings in homes. Although every building or dwelling unit is currently required to be tested for air leakage, a better-organized and more specific enumeration of key insulation and sealing requirements will lead to tighter, better-insulated, more energy efficient homes. The two columns are largely based on current insulation installation requirements and air barrier criteria in the 2012 IECC. We expect that as technology advances, and as building and inspection practices improve, this list will be updated. The reorganization of the requirements as presented above will facilitate that regular improvement in future code editions.

Cost Impact: The code change proposal will not increase the cost of construction.

RE77-13

Public Hearing:	Committee:	AS	AM	D
	Assembly:	ASF	AMF	DF

R402.4.1.1T #1-EC-DEAN-HARRIS-MISURIELLO-PRINDLE-STONE

RE78 – 13
Table R402.4.1.1 (IRC Table N1102.4.1.1)

Proponent: Michael Schmeida, Divisional Manager-Sustainability and Government/Regulatory Affairs representing Tremco Commercial Sealants and Waterproofing, Beachwood, Ohio (mschmeida@tremcoinc.com)

Revise as follows:

Table R402.4.1.1 (N1102.4.1.1)
AIR BARRIER AND INSULATION INSTALLATION

COMPONENT	CRITERIA
Air barrier and thermal barrier	A continuous air barrier shall be installed in the building envelope. Exterior thermal envelope contains a continuous air barrier. Breaks or joints in the air barrier shall be sealed <u>Breaks or joints in the thermal barrier shall be restored.</u> Air permeable insulation shall not be used as a sealing material.

(Portions of table not shown remain unchanged.)

Reason: Requiring insulation insures continuity in the thermal envelope and eliminates conductive transfer of energy through un-insulated spaces.

Cost Impact: The cost impact would be negligible.

RE78-13

Public Hearing:	Committee:	AS	AM	D
	Assembly:	ASF	AMF	DF

R402.4.1.1T #1-EC-SCHMEIDA

RE79 – 13
Table R402.4.1.1 (IRC Table N1102.4.1.1)

Proponent: Brian Dean (Brian.Dean@icfi.com), Energy Efficient Codes Coalition; Garrett Stone, Brickfield Burchette Ritts & Stone, PC; Jeff Harris, Alliance to Save Energy; Harry Misuriello, American Council for an Energy-Efficient Economy; and Bill Prindle, Energy Efficient Codes Coalition

Revise as follows:

TABLE R402.4.1.1 (N1102.4.1.1)
AIR BARRIER AND INSULATION INSTALLATION INSPECTION

(Portions of Table not shown remain unchanged)

h. First value is cavity insulation, second is continuous insulation or insulated siding, so "13+5" means R-13 cavity insulation plus R-5 continuous insulation or insulated siding. ~~If structural sheathing covers 40 percent or less of the exterior, continuous insulation *R*-value shall be permitted to be reduced by no more than R-3 in the locations where structural sheathing is used – to maintain a consistent total sheathing thickness.~~

Reason: The purpose of this code change is to clarify and enhance compliance with and enforcement of the codes by organizing air barrier and insulation installation requirements into two separate checklists in the table. The proposal also updates and improves the language in the table to add clarity and to ensure that crucial elements of the thermal envelope are effectively sealed, installed and verified.

The proper installation of insulation and reasonable control of air leakage are both critical to achieving energy savings in homes. Although every building or dwelling unit is currently required to be tested for air leakage, a better-organized and more specific enumeration of key insulation and sealing requirements will lead to tighter, better-insulated, more energy efficient homes. The two columns are largely based on current insulation installation requirements and air barrier criteria in the 2012 IECC. We expect that as technology advances, and as building and inspection practices improve, this list will be updated. The reorganization of the requirements as presented above will facilitate that regular improvement in future code editions.

Cost Impact: The code change proposal will not increase the cost of construction.

RE79-13

Public Hearing:	Committee:	AS	AM	D
	Assembly:	ASF	AMF	DF

R402.4.1.1T #2-EC-DEAN-HARRIS-MISURIELLO-PRINDLE-STONE

RE80 – 13
Table R402.4.1.1 (IRC Table N1102.4.1.1)

Proponent: Michael Schmeida, Divisional Manager-Sustainability and Government/Regulatory Affairs representing Tremco Commercial Sealants and Waterproofing, Beachwood, Ohio (mschmeida@tremcoinc.com)

Revise as follows:

TAB;E R402.4.1.1 (N1102.4.1.1)
AIR BARRIER AND INSULATION INSTALLATION

Component	Criteria
Garage separation	Air sealing and thermal separation shall be provided between the garage and conditioned space for all joints, service penetrations, and fenestrations.

(Portions of Table not shown remain unchanged.)

Reason:
1. Sealing helps mitigate air movement into or out of the conditioned space, thereby reducing energy needs in mitigating uncontrolled air movement.
2. Requiring insulation insures continuity in the thermal envelope and eliminates conductive transfer of energy through un-insulated spaces.

Cost Impact: The impact would be $500 depending on geography for a 2000/sqft home, but the ROI would be 3-5 years depending on region, design, etc.

RE80-13

Public Hearing:	Committee:	AS	AM	D
	Assembly:	ASF	AMF	DF

R402.4.1.1T #2-EC-SCHMEIDA

RE81 – 13
Table R402.4.1.1 (IRC N1102.4.1.1)

Proponent: Michael Schmeida, Divisional Manager-Sustainability and Government/Regulatory Affairs representing Tremco Commercial Sealants and Waterproofing, Beachwood, Ohio (mschmeida@tremcoinc.com)

Revise as follows:

TABLE R402.4.1.1 (N1102.4.1.1)
AIR BARRIER AND INSULATION INTALLATION

COMPONENT	CRITERIA[a]
Air barrier and thermal barrier	A continuous air barrier shall be installed in the building envelope. Exterior thermal envelope contains a continuous air barrier. Breaks or joints in the air barrier shall be sealed. Air-permeable insulation shall not be used as a sealing material.
Ceiling/attic	The air barrier in any dropped ceiling/soffit shall be aligned with the insulation and any gaps in the air barrier sealed. Access openings, drop down stair or knee wall doors to unconditioned attic spaces shall be sealed.
Walls	Corners and headers shall be insulated and the junction of the foundation and sill plate shall be sealed. The junction of the top plate and top of exterior walls shall be sealed. Exterior thermal envelope insulation for framed walls shall be installed in substantial contact and continuous alignment with the air barrier. Knee walls shall be sealed.
Windows, skylights and doors	The space between window/door jambs and framing and skylights and framing shall be sealed <u>on both the interior and exterior with a middle insulating layer filling the gap between the fenestration and framing/opening.</u>
Rim joists	Rim joists shall be insulated and include the air barrier.
Floors (including above-garage and cantilevered floors)	Insulation shall be installed to maintain permanent contact with underside of subfloor decking. The air barrier shall be installed at any exposed edge of insulation.
Crawl space walls	Where provided in lieu of floor insulation, insulation shall be permanently attached to the crawlspace walls. Exposed earth in unvented crawl spaces shall be covered with a Class I vapor retarder with overlapping joints taped.
Shafts, penetrations	Duct shafts, utility penetrations, and flue shafts opening to exterior or unconditioned space shall be sealed.
Narrow cavities	Batts in narrow cavities shall be cut to fit, or narrow cavities shall be filled by insulation that on installation readily conforms to the available cavity space.
Garage separation	Air sealing shall be provided between the garage and conditioned spaces.
Recessed lighting	Recessed light fixtures installed in the building thermal envelope shall be air tight, IC rated, and sealed to the drywall.
Plumbing and wiring	Batt insulation shall be cut neatly to fit around wiring and plumbing in exterior walls, or insulation that on installation readily conforms to available space shall extend behind piping and wiring.
Shower/tub on exterior wall	Exterior walls adjacent to showers and tubs shall be insulated and the air barrier installed separating them from the showers and tubs.

Electrical/phone box on exterior walls	The air barrier shall be installed behind electrical or communication boxes or air sealed boxes shall be installed.
HVAC register boots	HVAC register boots that penetrate building thermal envelope shall be sealed to the subfloor or drywall.
Fireplace	An air barrier shall be installed on fireplace walls. Fireplaces shall have gasketed doors.

a. In addition, inspection of log walls shall be in accordance with the provisions of ICC-400.

Reason:

1. Installing a seal on both the interior and exterior side helps mitigate infiltration as well as exfiltration of air into or out of the wall assembly, thereby reducing energy needs in mitigating uncontrolled air movement.
2. Requiring insulation insures continuity in the thermal envelope and eliminates conductive transfer of energy through un-insulated spaces.

Cost Impact: The cost would be negligible.

RE81-13

Public Hearing:	Committee:	AS	AM	D
	Assembly:	ASF	AMF	DF

R402.4.1.1T #3-EC-SCHMEIDA

RE82 – 13
Table R402.4.1.1 (IRC Table N1102.4.1.1)

Proponent: Michael Schmeida, Divisional Manager-Sustainability and Government/Regulatory Affairs representing Tremco Commercial Sealants and Waterproofing, Beachwood, Ohio (mschmeida@tremcoinc.com)

Revise as follows:

Table R402.4.1.1 (N1102.4.1.1)
AIR BARRIER AND INSULATION INSTALLATION

COMPONENT	CRITERIA
Shafts, penetrations	Duct shafts, utility penetrations and flue shafts opening to exterior or unconditioned space shall be sealed <u>on both conditioned and unconditioned side of the opening with an insulating layer between the seals.</u>

(Portions of Table not shown remain unchanged.)

Reason:
1. Installing a seal on both the interior and exterior side helps mitigate infiltration as well as exfiltration of air into or out of the wall assembly, thereby reducing energy needs in mitigating uncontrolled air movement.
2. Requiring insulation insures continuity in the thermal envelope and eliminates conductive transfer of energy through un-insulated spaces.

Cost Impact: The cost would be negligible.

RE82-13

Public Hearing:	Committee:	AS	AM	D
	Assembly:	ASF	AMF	DF

R402.4.1.1T #4-EC-SCHMEIDA

RE83 – 13
Table R402.4.1.1 (IRC Table N1102.4.1.1)

Proponent: Ellen Eggerton, representing Virginia Building and Code Officials Association

Revise as follows:

TABLE R402.4.1.1 (N1102.4.1.1)
AIR BARRIER AND INSULATION INSTALLATION

COMPONENT	CRITERIA[a]
Walls	Cavities within corners and headers shall be insulated by completely filling the cavity with a material having a thermal resistance of R3 per inch minimum. ~~and~~ The junction of the foundation and sill plate shall be sealed. The junction of the top plate and top of exterior walls shall be sealed. Exterior thermal envelope insulation for framed walls shall be installed in substantial contact and continuous alignment with the air barrier. Knee walls shall be sealed.

(Portions of Table not shown remain unchanged)

Reason: The current text says, "Corners and headers shall be insulated …" All headers and corners under all circumstances? Insulated to what level? This provision is a carryover of the 2009 IECC requirement. Varying answers to these questions have already lead to varying interpretations of the code requirements, uneven enforcement, and confusion in the regulated community. This proposal intends to allay some of that confusion by specifying that headers and corners must be insulated when there is an available cavity (e.g., a two-ply 2x header in a 2x4 wall leaves no cavity to fill) and by providing a practical definition of what *insulated* means in this context. Typical insulating materials like fiberglass and rigid foam can easily achieve R3 per inch.

Cost Impact: There will be a cost impact from this proposal to the extent that this requirement was not previously enforced due to ambiguity in the requirement. Regardless, the quantities of insulation being installed are small, but there may be many of these areas to insulate, depending on the size, design, and layout of the proposed residential building.

RE83-13

Public Hearing:	Committee:	AS	AM	D
	Assembly:	ASF	AMF	DF

R402.4.1.1T-EC-EGGERTON

RE84 – 13
Table R402.4.1.1 (IRC Table N1102.4.1.1)

Proponent: Joseph Lstiburek, Building Science Corporation, representing self (joe@buildingscience.com)

Revise as follows:

TABLE 402.4.1.1 (N1102.4.1.1)
AIR BARRIER AND INSULATION INSTALLATION

COMPONENT	INSULATION INSTALLATION CRITERIA
Floors (including above garage and cantilevered floors)	Floor framing cavity insulation shall be installed to maintain permanent contact with underside of subfloor decking or floor framing cavity insulation shall be permitted to be in contact with the topside of sheathing or continuous insulation installed on the bottom side of floor framing and extends from the bottom to the top of all perimeter floor framing members. The air barrier shall be installed at any exposed edge of insulation.

(Portions of Table not shown remain unchanged)

Reason: Requiring insulation in floors to be in direct contact with the underside of subfloor decking is one insulating option. Another option is to have an airspace between the floor sheathing and the top of the cavity insulation where this cavity insulation is in direct contact with the topside of sheathing or continuous insulation installed on the underside of the floor framing and is combined with perimeter insulation that meets or exceeds the R-value requirements for walls. This second option leads to fewer cold spots yet does not change the heat loss as long as the cavity insulation is in direct contact with a sheathing below it or continuous insulation below it. It also facilitates services to be enclosed within the thermal envelope.

Cost Impact: The code change proposal will not increase the cost of construction.

RE84-13

Public Hearing:	Committee:	AS	AM	D
	Assembly:	ASF	AMF	DF

R402.4.1.1T-EC-LSTIBUREK

RE85-13
Table R402.4.1.1 (IRC Table N1102.4.1.1)

Proponent: Shaunna Mozingo, City of Cherry Hills Village, representing Colorado Chapter of ICC, Inc.
smozingo@coloradocode.net

Delete and substitute as follows:

~~**TABLE 402.4.1.1 (N1102.4.1.1)**~~
~~**AIR BARRIER AND INSULATION INSTALLATION**~~

TABLE 402.4.1.1 (N1102.4.1.1)
AIR BARRIER AND INSULATION INSTALLATION

COMPONENT	AIR BARRIER CRITERIA	INSULATION INSTALLATION CRITERIA
General Requirements	A continuous air barrier shall be installed in the building envelope. Exterior thermal envelope contains a continuous air barrier. Breaks or joints in the air barrier shall be sealed.	Air-permeable insulation shall not be used as a sealing material..
Ceiling / attic	The air barrier in any dropped ceiling/soffit shall be aligned with the insulation and any gaps in the air barrier sealed. Access openings, drop down stair or knee wall doors to unconditioned attic spaces shall be sealed.	The insulation in any dropped ceiling/soffit shall be aligned with the air barrier.
Walls	The junction of the foundation and sill plate shall be sealed. The junction of the top plate and top of exterior walls shall be sealed. Knee walls shall be sealed.	Corners and headers shall be insulated. Exterior thermal envelope insulation for framed walls shall be installed in substantial contact and continuous alignment with the air barrier.
Windows, skylights and doors	The space between window/door jambs and framing and skylights and framing shall be sealed.	
Rim joists	Rim joists shall include the air barrier.	Rim joists shall be insulated.
Floors (including above garage and cantilevered floors)	The air barrier shall be installed at any exposed edge of insulation.	Insulation shall be installed to maintain permanent contact with underside of subfloor decking.
Crawl space walls	Exposed earth in unvented crawl spaces shall be covered with a Class I vapor retarder with overlapping joints taped.	Where provided in lieu of floor insulation, insulation shall be permanently attached to the crawlspace walls.
Shafts, penetrations	Duct shafts, utility penetrations, and flue shafts opening to exterior or unconditioned space shall be sealed.	
Narrow cavities		Batts in narrow cavities shall be cut to fit, or narrow cavities shall be filled by insulation that on installation readily conforms to the available cavity space.
Garage separation	Air sealing shall be provided between	

	the garage and conditioned spaces.	
Recessed lighting	Recessed light fixtures installed in the building thermal envelope shall be sealed to the drywall.	Recessed light fixtures installed in the building thermal envelope shall be air tight, IC rated.
Plumbing and wiring		Batt insulation shall be cut neatly to fit around wiring and plumbing in exterior walls, or insulation that on installation readily conforms to available space shall extend behind piping and wiring.
Shower / tub on exterior wall	The air barrier installed at exterior walls adjacent to showers and tubs shall separate them from the showers and tubs.	Exterior walls adjacent to showers and tubs shall be insulated.
Electrical / phone box on exterior walls	The air barrier shall be installed behind electrical or communication boxes or air sealed boxes shall be installed.	
HVAC register boots	HVAC register boots that penetrate building thermal envelope shall be sealed to the subfloor or drywall.	
Fireplace	An air barrier shall be installed on fireplace walls. Fireplaces shall have gasketed doors	

a. In addition, inspection of log walls shall be in accordance with the provisions of ICC-400.

Reason: Reason: Table R402.4.1.1 in the 2012 IECC and 2009 IECC has contained a table that included insulation and air barrier requirements within the same criteria. This has created confusion with the trades in the construction of residential housing. This change adds an additional column to the table and separates air barrier criteria and insulation criteria. This change adds clarity for the trades.

No substantive changes were made in the narrative criteria descriptions with the exception of separating sentences which contain criteria for both insulation and air barrier into two narratives; one for insulation and one for air barrier criteria.

The “air barrier and thermal barrier” component from Table R402.4.1.1 in the 2009 and 2012 IECC was renamed as “general requirements” but the criteria from the previous “air barrier and thermal barrier” component row has not changed with the exception of separating insulation and air barrier criteria.

Cost Impact: The code change proposal will not increase the cost of construction. No additional costs.

RE85-13

Public Hearing:	Committee:	AS	AM	D
	Assembly:	ASF	AMF	DF

R402.4.1.1T-EC-MOZINGO

RE86 – 13

Table R402.4.1.1 (IRC Table N1102.4.1.1), R402.4.2 (IRC N1102.4.2)

Proponent: Thomas Stroud, Senior Manager, Codes & Standards, representing Hearth, Patio & Barbecue Association (stroud@hpba.org)

Revise as follows:

TABLE R402.4.1.1 (N1102.4.1.1)
AIR BARRIER AND INSULATION INSTALLATION

COMPONENT	CRITERIA[a]
Air barrier and thermal barrier	A continuous air barrier shall be installed in the building envelope. Exterior thermal envelope contains a continuous air barrier. Breaks or joints in the air barrier shall be sealed. Air-permeable insulation shall not be used as a sealing material.
Ceiling/attic	The air barrier in any dropped ceiling/soffit shall be aligned with the insulation and any gaps in the air barrier sealed. Access openings, drop down stair or knee wall doors to unconditioned attic spaces shall be sealed.
Walls	Corners and headers shall be insulated and the junction of the foundation and sill plate shall be sealed. The junction of the top plate and top of exterior walls shall be sealed. Exterior thermal envelope insulation for framed walls shall be installed in substantial contact and continuous alignment with the air barrier. Knee walls shall be sealed.
Windows, skylights and doors	The space between window/door jambs and framing and skylights and framing shall be sealed.
Rim joists	Rim joists shall be insulated and include the air barrier.
Floors (including above-garage and cantilevered floors)	Insulation shall be installed to maintain permanent contact with underside of subfloor decking. The air barrier shall be installed at any exposed edge of insulation.
Crawl space walls	Where provided in lieu of floor insulation, insulation shall be permanently attached to the crawlspace walls. Exposed earth in unvented crawl spaces shall be covered with a Class I vapor retarder with overlapping joints taped.
Shafts, penetrations	Duct shafts, utility penetrations, ~~and~~ fire place chases and flue shafts opening to exterior or unconditioned space shall be sealed.
Narrow cavities	Batts in narrow cavities shall be cut to fit, or narrow cavities shall be filled by insulation that on installation readily conforms to the available cavity space.
Garage separation	Air sealing shall be provided between the garage and conditioned spaces.
Recessed lighting	Recessed light fixtures installed in the building thermal envelope shall be air tight, IC rated, and sealed to the drywall.
Plumbing and wiring	Batt insulation shall be cut neatly to fit around wiring and plumbing in exterior walls, or insulation that on installation readily conforms to available space shall extend behind piping and wiring.
Shower/tub on exterior wall	Exterior walls adjacent to showers and tubs shall be insulated and the air barrier installed separating them from the showers and tubs.
Electrical/phone box on exterior walls	The air barrier shall be installed behind electrical or communication boxes or air sealed boxes shall be installed.

HVAC register boots	HVAC register boots that penetrate building thermal envelope shall be sealed to the subfloor or drywall.
~~Fireplace~~	~~An air barrier shall be installed on fireplace walls. Fireplaces shall have gasketed doors.~~

a. In addition, inspection of log walls shall be in accordance with the provisions of ICC-400.

R402.4.2 (N1102.4.2) Fireplaces. New wood-burning fireplaces shall have tight fitting flue dampers or doors, and outdoor combustion air. When using tight-fitting doors on UL 127 fireplaces, they must be tested and listed for the fireplace.

Reason: In 2012 Table R402.4.1.1 Fireplace criteria states an air barrier shall be installed on fireplace walls. Fireplaces shall have gasketed doors. In Section R402.4.2 it states new wood-burning fireplaces shall have tight-fitting flue dampers or doors, and outdoor combustion air. We interpret this to mean traditional, field-fabricated, "masonry fireplaces" in accordance with 2009 IRC Section R1001, and constructed of concrete or solid clay-masonry units; NOT "factory-built," UL 127 fireplaces in accordance with IRC Section R1004. Because of requirements in the IECC that require all fireplaces to be provided with gasketed doors, a great deal of controversy has resulted. Most factory-built fireplaces are not listed for use with sealed glass doors and installing such doors on fireplaces that are not tested for these doors could cause overheating of the fireplace resulting in a fire hazard. Without testing, the effect of the doors will be an unknown. In this regard, the intent of Section R402.4.2 is to mitigate air leakage during periods of non-use, but not where the conditions of fireplace installation are in violation of the UL 127 listing.

Regarding the requirement for an air barrier on "fireplace walls", this is an unclear statement and is clarified by the addition in *Shafts, Penetrations* that the air sealing is to be on the chase and not on the fireplace. This will address chase sealing details that are needed and gives clarification to address framed wall construction.

Cost Impact: These code changes will not increase the cost of construction.

RE86-13

Public Hearing:	Committee:	AS	AM	D
	Assembly:	ASF	AMF	DF

R402.4.1.1T-EC-STROUD

RE87 – 13

Table R402.4.1.1, (IRC Table N1102.4.1.1), R402.4.2 (IRC N1102.4.2)

Proponent: Brenda A. Thompson, Clark County Development Services, Las Vegas NV, representing ICC Sustainability, Energy & High Performance Building Code Action Committee (bat@clarkcounty.gov)

Revise as follows:

TABLE R402.4.1.1 (N1102.4.1.1)
AIR BARRIER AND INSULATION INSTALLATION

COMPONENT	CRITERIA[a]
Air barrier and thermal barrier	A continuous air barrier shall be installed in the building envelope. Exterior thermal envelope contains a continuous air barrier. Breaks or joints in the air barrier shall be sealed. Air-permeable insulation shall not be used as a sealing material.
Ceiling/attic	The air barrier in any dropped ceiling/soffit shall be aligned with the insulation and any gaps in the air barrier sealed. Access openings, drop down stair or knee wall doors to unconditioned attic spaces shall be sealed.
Walls	Corners and headers shall be insulated and the junction of the foundation and sill plate shall be sealed. The junction of the top plate and top of exterior walls shall be sealed. Exterior thermal envelope insulation for framed walls shall be installed in substantial contact and continuous alignment with the air barrier. Knee walls shall be sealed.
Windows, skylights and doors	The space between window/door jambs and framing and skylights and framing shall be sealed.
Rim joists	Rim joists shall be insulated and include the air barrier.
Floors (including above-garage and cantilevered floors)	Insulation shall be installed to maintain permanent contact with underside of subfloor decking. The air barrier shall be installed at any exposed edge of insulation.
Crawl space walls	Where provided in lieu of floor insulation, insulation shall be permanently attached to the crawlspace walls. Exposed earth in unvented crawl spaces shall be covered with a Class I vapor retarder with overlapping joints taped.
Shafts, penetrations	Duct shafts, utility penetrations, ~~and~~ flue shafts <u>and fire places</u> opening to exterior or unconditioned space shall be sealed.
Narrow cavities	Batts in narrow cavities shall be cut to fit, or narrow cavities shall be filled by insulation that on installation readily conforms to the available cavity space.
Garage separation	<u>Air sealing shall be provided between the garage and conditioned spaces.</u>
Recessed lighting	Recessed light fixtures installed in the building thermal envelope shall be air tight, IC rated, and sealed to the drywall.
Plumbing and wiring	Batt insulation shall be cut neatly to fit around wiring and plumbing in exterior walls, or insulation that on installation readily conforms to available space shall extend behind piping and wiring.
Shower/tub on exterior wall	Exterior walls adjacent to showers and tubs shall be insulated and the air barrier installed separating them from the showers and tubs.
Electrical/phone box on exterior walls	The air barrier shall be installed behind electrical or communication boxes or air sealed boxes shall be installed.
HVAC register boots	HVAC register boots that penetrate building thermal envelope shall be sealed to the subfloor or drywall.
~~Fireplace~~	~~An air barrier shall be installed on fireplace walls. Fireplaces shall have gasketed doors.~~

[a] In addition, inspection of log structures shall be in accordance with the provisions of ICC-400.

R402.4.2 (IRC N1102.4.2) Fireplaces. New wood-burning fireplaces shall have tight fitting flue dampers or doors, and outdoor combustion air.

Reason: This proposal was submitted by the ICC Sustainability Energy and High Performance Code Action Committee (SEHPCAC). The SEHPCAC was established by the ICC Board of Directors to pursue opportunities to improve and enhance assigned International Codes or portion thereof. This includes both the technical aspects of the codes as well as the code content in terms of scope and application of referenced standards. Since its inception in July, 2011, the SEHPCAC has held 3 open meetings and over 30 workgroup calls which included members of the SEHPCAC as well as any interested party to discuss and debate proposed changes and public comments. Related documentation and reports are posted on the SEHPCAC website at: http://www.iccsafe.org/cs/SEHPCAC/Pages/default.aspx.

The reason for this proposal:

In 2012 Table R402.4.1.1 Fireplace criteria states an air barrier shall be installed on fireplace walls. Fireplaces shall have gasketed doors. In Section R402.4.2 it states new wood-burning fireplaces shall have tight-fitting flue dampers or doors, and outdoor combustion air. We interpret this to mean traditional, field-fabricated, “masonry fireplaces” in accordance with 2009 IRC Section R1001, and constructed of concrete or solid clay-masonry units; NOT “factory-built,” UL 127 fireplaces in accordance with IRC Section R1004. Because of requirements in the IECC that require all fireplaces to be provided with gasketed doors, a great deal of controversy has resulted. Most factory-built fireplaces are not tested for use with sealed glass doors and installing such doors on fireplaces that are not tested for these doors could cause overheating of the fireplace resulting in a fire hazard. Without testing, the effect of the doors will be an unknown. In this regard, the intent of Section R402.4.2 is to mitigate air leakage during periods of non-use, but not where the conditions of fireplace installation are in violation of the UL 127 listing. This will address chase seal details that are needed and gives clarification to address framed wall construction.

Please note that deleting the air barrier requirement for fireplace walls has not net effect as there are at least 2 other locations in the table where the air barrier requirement for walls is restated and such would include fireplace walls.

Cost Impact: The change will not increase the cost of construction.

RE87-13

Public Hearing:	Committee:	AS	AM	D
	Assembly:	ASF	AMF	DF

R402.4.1.1T-EC-THOMPSON-SEHPCAC

RE88 – 13

R402.4.1.2 (IRC N1102.4.1.2), R402.4.1.2.1 (NEW) (IRC N1102.4.1.2.1 (NEW))

Proponent: Michael D. Fischer, Kellen Company, representing the Center for the Polyurethanes Industry (mfischer@kellencompany.com)

Revise as follows:

R402.4.1.2 (N1102.4.1.2) Testing. The building or dwelling unit shall be tested by an *approved* agency and verified as having an air leakage rate of not exceeding ~~5~~ 4 air changes per hour in Climate Zones 1 and 2, and 3 air changes per hour in Climate Zones 3 through 8. Testing shall be conducted with a blower door at a pressure of 0.2 inches w.g. (50 Pascals). ~~Where required by the *code official*, testing shall be conducted by an *approved* third party.~~ A written report of the results of the test shall be signed by the testing agency ~~party conducting the test~~ and provided to the *code official*. Testing shall be performed at any time after creation and sealing of all penetrations of the *building thermal envelope*.

402.4.1.2.1 (N1102.4.1.2.1) The air leakage rate in Climate Zones 3 through 8 shall be permitted to be no greater than 4 air changes per hour where all heating and conditioning ducts, air handlers, and filter boxes are located within the *building thermal envelope.*

Reason: Building envelope tightness is a proven energy efficiency measure. With recent improvements in construction techniques and quality control, builders have demonstrated their ability to comply with air barrier requirements in the code as well as above-code programs. At the same time, the location of air handling ducts within the building thermal envelope has also become a more common and desirable construction technique- especially with new provisions for unvented attics in the IRC. This proposal offers a compromise that establishes a slight improvement in air barrier performance in the southern climate zones, as well as a trade-up in Climate Zones 3-8 that encourages the use of unvented attics.

Cost Impact: This proposal may result in an increased initial construction cost in some climate zones depending upon the method of construction, but is likely to provide a short break-even point on energy consumption and utility costs.

RE88-13

Public Hearing:	Committee:	AS	AM	D
	Assembly:	ASF	AMF	DF

R402.4.1.2-EC-FISCHER

RE89-13
R402.4.1.2 (IRC N1102.4.1.2)

Proponent: Michael Schmeida, Divisional Manager- Sustainability and Government/Regulatory Affairs, representing Tremco Commercial Sealants and Waterproofing, Beachwood, Ohio (mschmeida@tremcoinc.com)

Revise as follows:

R402.4.1.2 (N1102.4.1.2) Testing. The building or dwelling unit shall be tested and verified as having an air leakage rate of not exceeding ~~5 air changes in Climate Zones 1 and 2, and 3 air exchanges per hour in Climate Zones 3 through 8~~. 0.6 times the volume of the home per hour**.** Testing shall be conducted with a blower door at a pressure of 0.2 inches w.g. (50 Pascals). Where required by the *code official*, testing shall be conducted by an *approved* third party. A written report of the results of the test shall be signed by the party conducting the test and provided to the *code official*. Testing shall be performed at any time after creation of all penetrations of the *building thermal envelope*.

During testing:

1. Exterior windows and doors, fireplace and stove doors shall be closed, but not sealed, beyond the intended weatherstripping or other infiltration control measures;
2. Dampers including exhaust, intake, makeup air, backdraft and flue dampers shall be closed, but not sealed beyond intended infiltration control measures;
3. Interior doors, if installed at the time of the test, shall be open;
4. Exterior doors for continuous ventilation systems and heat recovery ventilators shall be closed and sealed;
5. Heating and cooling systems, if installed at the time of the test, shall be turned off; and
6. Supply and return registers, if installed at the time of the test, shall be fully open.

Reason:

1. Unmitigated air leakage is often cited as the number one reason for energy loss in structures. Continual reduction of air leakage in code is an ideal means of furthering energy conservation.
2. A climate zone specific mandate for energy-related performance does not conserve energy resources, such as coal and natural gas. Energy is not just what is at the outlet, switch, etc., but the energy in the fuels being burned to create electrical energy. Requiring stricter energy performance in structures regardless of whether they are in warm climates that may use strictly electricity for cooling without significant heating does conserve energy resources.

Cost Impact: The impact would vary greatly from design to design and climate to climate. However, it would be offset by savings in energy use.

RE89-13

Public Hearing:	Committee:	AS	AM	D
	Assembly:	ASF	AMF	DF

R402.4.1.2-EC-SCHMEIDA

RE90 – 13

R402.4.1.2 (IRC N1102.4.1.2), Table R405.5.2(1) (IRC Table N1105.5.2(1))

Proponent: Don Surrena, CBO, representing National Association of Home Builders (NAHB) (dsurrena@nahb.org)

Revise as follows:

R402.4.1.2 (N1102.4.1.2) Testing. The building or dwelling unit shall be tested and verified as having an air leakage rate of not exceeding 5 air changes per hour in Climate Zones 1 and 2, and ~~3~~ 4 air changes per hour in Climate Zones 3 through 8. Testing shall be conducted with a blower door at a pressure of 0.2 inches w.g. (50 Pascals). Where required by the *code official*, testing shall be conducted by an *approved* third party. A written report of the results of the test shall be signed by the party conducting the test and provided to the *code official*. Testing shall be performed at any time after creation of all penetrations of the *building thermal envelope*.

Table R405.5.2(1) (N1105.5.2(1)
SPECIFICATIONS FOR THE STANDARD REFERENCE AND PROPOSED DESIGNS

BUILDING COMPONENT	STANDARD REFERENCE DESIGN	PROPOSED DESIGN
Air exchange rate	Air leakage rate of 5 air changes per hour in Climate Zones 1 and 2, and ~~3~~4 air changes per hour in Climate Zones 3 through 8 at a pressure of 0.2 inches w.g (50 Pa). The mechanical ventilation rate shall be in addition to the air leakage rate and the same as in the proposed design, but no greater than $0.01 \times CFA + 7.5 \times (N_{br} + 1)$ where: CFA = conditioned floor area Nbr = number of bedrooms Energy recovery shall not be assumed for mechanical ventilation.	For residences that are not tested, the same air leakage rate as the standard reference design. For tested residences, the measured air exchange rate[c]. The mechanical ventilation rated shall be in addition to the air leakage rate and shall be as proposed.

(Portions of table not shown remain unchanged)

Reason: Building tightness is an important part of an energy efficient and comfortable house; however, 3 air changes per hour at 50 Pascals is an extremely low target tightness especially for smaller homes. The ASHRAE Handbook of Fundamentals shows that less than 10% of new homes achieve 3 ACH or less. Four ACH is still an aggressive tightness level which will provide a tight, comfortable, energy efficient home for the consumer.

Cost Impact: The code change proposal will not increase the cost of construction.

RE90-13

Public Hearing:	Committee:	AS	AM	D
	Assembly:	ASF	AMF	DF

R402.4.1.2-EC-SURRENA

RE91 – 13
R402.4.1.2 (IRC N1102.4.1.2), Chapter 5

Proponent: Theresa A. Weston, PhD., representing DuPont Building Innovations (theresa.a.weston@usa.dupont.com)

Revise as follows:

R402.4.1.2 (N1102.4.1.2) Testing. The building or dwelling unit shall be tested and verified as having an air leakage rate of not exceeding 5 air changes per hour in Climate Zones 1 and 2, and 3 air changes per hour in Climate Zones 3 through 8. Testing shall be conducted in accordance with ASTM E 779 or ASTM E 1827 ~~with a blower door~~ and reported at a pressure of 0.2 inches w.g. (50 Pascals). Where required by the *code official*, testing shall be conducted by an *approved* third party. A written report of the results of the test shall be signed by the party conducting the test and provided to the *code official*. Testing shall be performed at any time after creation of all penetrations of the *building thermal envelope*.

During testing:

1. Exterior windows and doors, fireplace and stove doors shall be closed, but not sealed, beyond the intended weatherstripping or other infiltration control measures;
2. Dampers including exhaust, intake, makeup air, backdraft and flue dampers shall be closed, but not sealed beyond intended infiltration control measures;
3. Interior doors, if installed at the time of the test, shall be open;
4. Exterior doors for continuous ventilation systems and heat recovery ventilators shall be closed and sealed;
5. Heating and cooling systems, if installed at the time of the test, shall be turned off; and
6. Supply and return registers, if installed at the time of the test, shall be fully open.Add new reference standards:

Add new standards to Chapter 5 as follows:

E779-10 Standard Test Method for Determining Air Leakage Rate by Fan Pressurization

E1827-11 Standard Test Methods for Determining Airtightness of Buildings Using an Orifice Blower Door

Reason: This proposal adds appropriate standard blower door test methods to the code. The code currently does not reference a test method standard. The specification of standard test methods should improve the reliability of the data by which code compliance is determined.

Cost Impact: The code change proposal will not increase the cost of construction.

Analysis: A review of the standard proposed for inclusion in the code ASTM E1827-11 Standard Test Methods for Determining Airtightness of Buildings Using an Orifice Blower Door with regard to the ICC criteria for referenced standards (Section 3.6 of CP#28) will be posted on the ICC website on or before April 1, 2013.
Standard ASTM E779-03 is currently referenced in the IECC-Commercial Provisions, Chapter 5. Update to the latest edition, 2010 will be considered in a code change proposal for administrative update of standards. See the hearing order for the Administrative Code Committee.

RE91-13

Public Hearing:	Committee:	AS	AM	D
	Assembly:	ASF	AMF	DF

R402.4.1.2-EC-WESTON

RE92 – 13
R402.4.1.2 (New), (IRC N1102.4.1.2)

Proponent: Brent Ursenbach, Salt Lake County representing Utah Chapter ICC and Utah Association of Plumbing and Mechanical Officials Chapter ICC (bursenbach@slco.org)

Add text as follows:

R402.4.1.2 (N1102.4.1.2) Combustion Air Openings. In climate zones 3 through 8, where open combustion air ducts provide combustion air to open combustion fuel burning appliances, the appliances and combustion air opening shall be located outside the thermal envelope or enclosed in a room, isolated from inside the thermal envelope. Such rooms shall be sealed and insulated per the envelope requirements of Table R402.1.1, where the walls shall meaet a minimum of the basement wall R-value requirement. The door into the room shall be fully gasketed and any water lines and ducts in the room insulated per the requirements of R403. The combustion air duct must be insulated where it passes through conditioned space to a minimum of R-8.

Exception:

1. Direct vent appliances with both intake and exhaust pipes installed continuous to the outside.
2. Fireplaces and stoves complying with the requirements of R402.4.2 and IRC R1006.

Reason: The entire section R402.4 Air leakage- is of little value when a combustion air duct is installed, open to the conditioned space, virtually placing a large hole through the thermal envelope. Blower door testing as now required by the code cannot be accomplished with a combustion air opening inside the thermal envelope. Testers regularly block these opening as this is the only way they can pressurize the home; only to be opened after the test is completed. Ideally, direct vent, sealed combustion appliances solve the problem. Where less efficient, open combustion fuel burning appliances are used, it is reasonable and proper to isolate the appliances and the required combustion air from inside the thermal envelope.

Cost Impact: The code change proposal will increase the cost of construction, while it will reduce the energy consumption and cost throughout the life of the home.

RE92-13

Public Hearing:	Committee:	AS	AM	D
	Assembly:	ASF	AMF	DF

R402.4.1.2 (NEW)-EC-URSENBACH

RE93 – 13
R402.4.1.3 (NEW) (IRC N1102.4.1.3 (NEW))

Proponent: Robby Schwarz, representing EnergyLogic, Inc. (robby@nrglogic.com)

Add new text as follows:

R402.4.1.3 (N1102.4.1.3) Connection to Garage. The building or dwelling unit shall be tested and verified as being separate from an attached garage. While the blower door is being utilized to test the building or dwelling unit's leakage rate, the connection between the dwelling unit and the garage shall also be tested. The pressure in the garage with reference to dwelling unit shall not be less than 45 Pascals relative to the dwelling unit when the dwelling unit pressure is at 50 Pascals relative to the outside.

Reason: Separation between the house(dwelling unit) and garage is specifically called out on the air barrier and insulation table R402.4.1.1 yet it is unclear what is meant by this and why it is called out separately from the rest of the thermal envelops sealing that separates conditioned space from unconditioned space. The rational is an extension of efficiency into safety to ensure that pollutants and contaminants form the garage will not enter the home. A visual or written reference to this makes no sense when a test is available to ensure that separation has occurred. Testing is the only way to ensure safety and in extension greater efficiency.

Cost Impact: The code change proposal will not increase the cost of construction.

RE93-13

Public Hearing:	Committee:	AS	AM	D
	Assembly:	ASF	AMF	DF

R402.4.1.3 (NEW)-EC-SCHWARZ

RE94 – 13
R402.4.3 (IRC N1102.4.3)

Proponent: Jeff Inks, representing the Window & Door Manufacturers Association.

Revise as follows:

R402.4.3 (N1102.4.3) Fenestration air leakage. Windows, skylights and sliding glass doors shall have an air infiltration rate of no more than 0.3 cfm per square foot (1.5 L/s/m2), and swinging doors no more than 0.5 cfm per square foot (2.6 L/s/m2), when tested according to NFRC 400 or AAMA/ WDMA/CSA 101/I.S.2/A440 by an accredited, independent laboratory and listed and labeled by the manufacturer.

~~**Exception:** Site-built windows, skylights and doors.~~

Reason: This proposal is primarily a clean-up. The exception for site-built fenestration was removed from the commercial requirements during the last code development cycle as there is no justification for allowing it. These assemblies are required to meet the air leakage provisions of C402.4.3 for IECC commercial construction. Likewise, site-built windows, skylights and doors, if used in IECC residential construction, should meet the requirements of Section R402.4.3 without exception.

Cost Impact: The code change proposal will not increase the cost of construction.

RE94-13

Public Hearing:	Committee:	AS	AM	D
	Assembly:	ASF	AMF	DF

R402.4.3-EC-INKS

RE95 – 13
R402.5 (IRC N1102.5)

Proponent: Craig Conner, Building Quality, representing self (craig.conner@mac.com); Dr. Thomas D. Culp, Birch Point Consulting LLC, representing the Glazing Industry Code Committee (culp@birchpointconsulting.com)

Delete without substitution:

~~**R402.5 (N1102.5) Maximum fenestration U-factor and SHGC (Mandatory).** The area-weighted average maximum fenestration **U**-factor permitted using tradeoffs from Section R402.1.4 or R405 shall be 0.48 in Climate Zones 4 and 5 and 0.40 in Climate Zones 6 through 8 for vertical fenestration, and 0.75 in Climate Zones 4 through 8 for skylights. The area-weighted average maximum fenestration SHGC permitted using tradeoffs from Section R405 in Climate Zones 1 through 3 shall be 0.50.~~

Reason:
CONNER: The limits on U-factor and SHGC trade offs reduce flexibility without any compensating energy savings. A decrease in the energy efficiency of the windows through the performance calculation would have to be made up elsewhere leaving the resulting energy efficiency, so the energy result is neutral.

Given the stringency of the newer codes, this section mostly adds a bit of confusion to the code. The statement of a limit on trade offs is sometimes confused with the actual requirement itself (in Table R402.1). There is no need to bulk up the code with even small statements that seldom have any impact.

CULP: By definition, trade-offs are energy neutral, so these mandatory "hard limits" save no energy, but set artificial constraints that limit design flexibility and innovation. Practically speaking, the vast majority of "normal" windows already meet these criteria, so this section has little real impact, and only serves to (a) add confusion between these numbers and the real requirements in Table R402.1.1, and (b) cause compliance problems for unique or special applications.

For example, glass block used in a bathroom remodel:
… it has no label, so use the default U-factor and SHGC
… but the default values do not meet Table R402.1.1, so use a trade-off
… but the default values do not meet the hard limits in this section R402.5, so use area-weighted averaging
… but there is nothing else in the remodel to area-weight average.

So it becomes effectively illegal, even if there are other trade-offs that make the overall remodel even more energy efficient, and the only recourse is to seek a special allowance through the alternative methods provision.

This is just one example. What about special products used in tornado storm shelters that won't meet the U-factor hard limit? What about vacuum glazing that meets the U-factor and greatly exceeds the required energy efficiency, but not the SHGC hard limit? Do we want to discourage vacuum glazing?

Granted, these are not common situations, but what have we accomplished by creating artificial barriers and extra headaches for code officials and builders? This section should be removed.

Cost Impact: The code change proposal will not increase the cost of construction.

RE95-13

Public Hearing:	Committee:	AS	AM	D
	Assembly:	ASF	AMF	DF

R402.5-EC-CONNER-CULP

RE96 – 13
R402.5 (IRC N1102.5)

Proponent: Brian Dean, Energy Efficient Codes Coalition; Garrett Stone, Brickfield Burchette Ritts & Stone, PC; Jeff Harris, Alliance to Save Energy; Harry Misuriello, American Council for an Energy-Efficient Economy; and Bill Prindle, Energy Efficient Codes Coalition

Revise as follows:

R402.5 (N1102.5) Maximum fenestration *U*-factor and SHGC (Mandatory). The area-weighted average ~~maximum fenestration~~ *U*-factor ~~permitted~~ for vertical fenestration products when complying with this code ~~using trade-offs from~~ under Section R402.1.4 or Section R405 shall not exceed the U-factor specified in Table R402.1.1 by more than 25% ~~be 0.48 in Climate Zones 4 and 5 and 0.40 in Climate Zones 6 through 8 for vertical fenestration, and 0.75 in Climate Zones 4 through 8 for skylights~~. The area-weighted average U-factor for skylights when complying with this code under Section R402.1.4 or Section R405 shall not exceed the U-factor specified in Table R402.1.1 by more than 25%. The area-weighted average ~~maximum fenestration~~ SHGC ~~permitted~~ for all fenestration products when complying with this code under ~~using trade-offs from~~ Section R405 shall not exceed the SHGC specified in Table R402.1.1 by more than 50%~~in Climate Zones 1 through 3 shall be 0.50~~.

Reason: The purpose of this code change is to modify the requirements and clarify the language related to the maximum U-factor and SHGC for fenestration when using trade-offs for code compliance. This revision improves the energy efficiency and usability of the energy code by ensuring that as prescriptive fenestration efficiency requirements change, the mandatory fenestration maximums (for trade-offs) will automatically adjust as well, specifically by setting the maximum weighted average U-factor at 25% above the prescriptive value and the SHGC at 50% above the prescriptive value. In addition, the revision improves and clarifies the language in the section.

For nearly a decade, the current version of the fenestration U-factor and SHGC maximums in Section R402.5 have provided an effective and critical backstop for fenestration efficiency trade-offs under the Total UA compliance path and the Simulated Performance Alternative. This section ensures that fenestration, which is a crucial element in the thermal envelope, particularly from the standpoint of comfort, as well as condensation, energy efficiency and HVAC sizing, will not be overly weakened by trade-offs.

Unfortunately, as prescriptive fenestration U-factors and SHGC requirements have improved substantially over the last few code change cycles, the fenestration maximums have remained unchanged. For example:

- In the 2006 IECC, the prescriptive SHGC requirement in climate zone 3 was 0.40 and the SHGC maximum in trade-offs was 0.50 (25% higher than the prescriptive value).
- In the 2009 IECC, the prescriptive SHGC requirement was improved to 0.30, but the SHGC maximum remained at 0.50 (67% higher).
- In the 2012 IECC, the prescriptive SHGC requirement was further improved to 0.25, but the SHGC maximum remained at 0.50 (100% higher).

The proposal sets the maximum area-weighted average U-factor 25% higher and the SHGC 50% higher than the prescriptive value, giving a reasonable (but not unlimited) amount of flexibility to the design professional. We chose 25% for U-factor and 50% for SHGC based on judgment after reviewing the resulting values, in recognition that prescriptive U-factors tend to be greater than prescriptive SHGC values, justifying a smaller percentage, and reflecting the need for more flexibility for SHGC due to passive solar concerns. The following table shows the effect of this new proposal on the maximum values for vertical windows:

Climate Zone	Prescriptive U-factor	Maximum U-factor Current	Maximum U-factor Proposed	Prescriptive SHGC	Maximum SHGC Current	Maximum SHGC Proposed
1	NR	NR	NR	0.25	0.50	0.38
2	0.40	NR	0.50	0.25	0.50	0.38
3	0.35	NR	0.44	0.25	0.50	0.38
4	0.35	0.48	0.44	0.40	NR	0.60
5	0.32	0.48	0.40	NR	NR	NR
6 - 8	0.32	0.40	0.40	NR	NR	NR

The proposal also applies a uniform backstop percentage over all climate zones, improving efficiency and simplifying compliance and enforcement in states that stretch across multiple climate zones. The new maximums also allow considerable flexibility for innovative designs such as passive solar, because individual or multiple windows may have significantly higher SHGC or U-factor values, as long as they achieve an area-weighted average value that is within a reasonable range of the prescriptive values.

Because the Total UA and Simulated Performance Alternative compliance options are typically software-based, the change to a percentage-based maximum should require no additional effort on the part of the builder or design professional. Over the long run, this proposal will simplify the code, improve energy efficiency, and add consistency because the maximum will automatically track any change to the fenestration U-factor or SHGC requirements.

The fenestration trade-off limits currently found in the residential chapter of the *IECC* are simple, mandatory measures that ensure all new buildings contain high-quality, cost-effective windows that save energy, provide reasonable comfort, resist condensation in colder climates and block unwanted solar gain in warmer climates. Without the protection of this backstop, fenestration values could be traded away to levels unacceptable in modern building practice. Given the improvements to window efficiency brought about by the 2012 *IECC* and our nation's high priority for energy efficiency, this proposal is a common-sense improvement to an effective code requirement.

- **Simple compliance.** The residential fenestration maximums are effective and easy to understand. These requirements have been successfully applied for the last several years. All states that have already adopted the 2006, 2009, and 2012 *IECC* have adopted these maximums to residential construction. They are also already seamlessly built into compliance software such as the Department of Energy's REScheck.
- **Flexible standard.** The area-weighted average approach embodied in the fenestration maximums allows considerable flexibility for the use of decorative glass, glass block, and other fenestration products, while maintaining a baseline performance for the building's overall glazing. In short, not all products are required to individually meet the maximum values; only the area-weighted average of all products in the building are required to meet the maximum values specified in this code provision.
- **Quality windows, energy savings and peak demand savings nationwide**. The fenestration maximums encourage the use of cost-effective energy-efficient windows nationwide. Because good windows reduce energy consumption both during peak cooling times in the summer months and during peak heating hours in the winter months, such windows help to reduce the strain on the electric grid and natural gas pipeline system and delay the need to build expensive peaking facilities. By reducing the trade-off of efficient windows for other measures, the maximums better capture the benefits of blocking solar gain and providing reasonable insulating value such as peak reduction, reduced cooling system sizes and year-round comfort. Consumers also enjoy the reduced costs that come with economies of scale and market transformation.
- **More comfortable buildings and less energy use.** Incremental changes in window efficiency can have a huge impact on occupant comfort because even the most efficient windows are, at best, still only the equivalent of about an R-3 wall in the winter. Moreover, unlike the opaque wall, even the best fenestration allows substantial summer solar heat gain into the conditioned space. Hot spots created by high solar gain in the summer and/or cold or drafty glass in the winter months can force an occupant to adjust the thermostat to compensate. A good window will provide reasonable insulating value, keeping occupants more comfortable during the coldest months. Similarly, windows with low SHGC will protect against hot spots and occupant discomfort, and will make it less likely that occupants will need to adjust the thermostat and use more energy.

For a more detailed discussion of the benefits of good fenestration, see the section on the benefits of efficient windows on the website of the Efficient Windows Collaborative (a Collaborative of the Alliance to Save Energy, the University of Minnesota, Center for Sustainable Building Research and Lawrence Berkeley National Laboratory, with support from the U.S. Department of Energy) -- http://www.efficientwindows.org/benefits.cfm.

The fenestration maximums have served an important role in ensuring residential energy efficiency for many years. We recommend that the proposed improvements to the fenestration maximums be adopted.

Cost Impact: The code change proposal will not increase the cost of construction.

RE96-13

Public Hearing:	Committee:	AS	AM	D
	Assembly:	ASF	AMF	DF

R402.5-EC-DEAN-HARRIS-MISURIELLO-PRINDLE-STONE

RE97 – 13

R402.5 (IRC N1102.5), R405.5 (IRC N1102.5), R405.5.3 (NEW) (IRC N1105.5.3 (NEW))

Proponent: Jeff Sonne, representing the Florida Solar Energy Center (jeff@fsec.ucf.edu)

Revise as follows:

~~**R402.5 (N1102.5) Maximum fenestration *U* factor and SHGC (Mandatory).** The area-weighted average maximum fenestration *U* factor permitted using tradeoffs from Section R402.1.4 or R405 shall be 0.48 in Climate Zones 4 and 5 and 0.40 in Climate Zones 6 through 8 for vertical fenestration, and 0.75 in Climate Zones 4 through 8 for skylights. The area-weighted average maximum fenestration SHGC permitted using tradeoffs from Section R405 in Climate Zones 1 through 3 shall be 0.50.~~

R405.5 (N1105.5) Calculation procedure. Calculations of the performance design shall be in accordance with Sections R405.5.1 ~~and~~ through ~~R405.5.2~~ R405.5.3.

R405.5.3 (N1105.5.3) Maximum fenestration SHGC. In Climate Zones 1 through 3 the Proposed Design shall have either an area-weighted average maximum fenestration SHGC of 0.50 or a fenestration area-weighted average overhang of 4.0 feet or greater (all conditioned space fenestration products that are greater than 50-percent glazed shall be included in the calculation).

Reason: Prescriptive compliance already has separate window U-factor and SHGC requirements stipulated in Table R402.1.1, so section R402.5 only applies to performance compliance; this mod moves the requirement to Section R405 (performance) for clarity.

Porches provide shade for windows. Relaxing the SHGC requirement for performance compliance only for dwellings with large overhangs will help lower costs and typically increase visible light in these dwellings, preserving regional vernacular architecture while still upholding energy performance.

Cost Impact: The code change proposal will not increase the cost of construction. The proposal only provides a clarification and a compliance option.

RE97-13

Public Hearing:	Committee:	AS	AM	D
	Assembly:	ASF	AMF	DF

R402.5-EC-SONNE

RE98 – 13
R402.6 (NEW) (IRC N1102.6 (NEW))

Proponent: Jeff Sonne, representing the Florida Solar Energy Center (jeff@fsec.ucf.edu)

Revise as follows:

R402.6 (N1102.6) Limitations to compliance by Section R402 (Prescriptive). Where Section R402 is chosen as the compliance option for the building, the restrictions in Section R402.6.1 through R402.6.3 shall apply.

R402.6.1 (N1102.6.1) Electric space heating. Electric resistance space heating systems shall not be used when complying with this code by Section R402.

Exception: The prohibition on electric resistance heat does not apply to additions, renovations and replacement heating systems installed in existing buildings.

R402.6.2 (N1102.6.2) Air handlers in attics. Air handlers shall not be installed in attics when complying with Section R402.

R402.6.3 (N1102.6.3) Maximum percent fenestration area. The area of fenestration products more than 50-percent glazed shall not exceed 15 percent of the conditioned floor area (CFA).

Exceptions:

1. For new construction the building shall be considered in compliance with Table R402.1.1 where the total *building thermal envelope* UA (sum of U-factor times assembly area) is less than or equal to the total UA resulting from using the U-factors in Table R402.1.3 multiplied by:
   - 1.1 For non-fenestration products: the same assembly area as in the proposed building.
   - 1.2 For fenestration products less than or equal to 50-percent glazed: the same assembly area as in the proposed building.
   - 1.3 For fenestration products that are greater than 50-percent glazed: the assembly area of the fenestration but not greater than 15 percent of the conditioned floor area.
2. For additions the following shall apply:
   - 2.1 Where fenestrations in an existing exterior wall are being removed or enclosed by an addition, the total fenestration area used to determine the installed fenestration percentage need not include the area of the fenestrations removed or enclosed by the addition.
   - 2.2 Additions of not greater than 600 square feet shall have a maximum of 50 percent fenestration area to conditioned floor area.
   - 2.3 Glazed fenestrations that were previously located in an existing exterior wall that is being removed or enclosed by an addition shall not be required to comply with the U-factor and solar heat gain coefficient requirements in Table R402.1.1 when reinstalled as part of the addition.

Reason: Electric space heating: During most cold spells, heat pumps can perform at twice the efficiency of electric resistance furnaces, reducing utility peak winter energy use. 2012 IECC Section R405, Table R405.5.2(1) is clear that the Standard Reference Home specification for heating systems that the "baseline" is an air source heat pump.

Attic air handler exclusion: All the heated or cooled air passes through the air handler. Locating the air handler in an attic creates a considerable summertime heat gain by conduction and by any return side air leakage for the system. Similarly, during winter nights the heated air will lose heat by conduction and any return side leakage will reduce the temperature of the air going into the system. Anyone wishing to comply with an air handler in the attic can comply with the performance method where energy modeling software applies the appropriate energy penalty for an attic location.

Maximum percent fenestration area: This limitation is consistent with the performance compliance reference and helps provide compliance method equivalence. It also provides better assurance that each new home will be able to achieve a high level of energy

performance and reduce large disparity between two minimum code compliant homes. Homes with larger fenestration area have two alternative compliance paths, either the UA alternative method defined in the exception or the performance method.

Cost Impact: The code change proposal will not increase the cost of construction.

RE98-13

Public Hearing:	Committee:	AS	AM	D
	Assembly:	ASF	AMF	DF

R402.6 (NEW)-EC-SONNE

RE99-13

R403.1 (IRC N1103.1), R403.1.1 (IRC N1103.1.1), R403.1.2 (IRC N1103.1.2), R403.2.1 (IRC N1103.2.1), R403.2.2 (N1103.2.2), R403.2.3 (IRC N1103.2.3), R403.2.4 (NEW) (IRC N1103.2.4 (NEW)), R403.2.2.1 (IRC N1103.2.2.1), R403.2.6 (NEW), (IRC N1103.2.6 (NEW), Table R405.2(1) (IRC Table N1105.2(1))

Proponent: Brian Dean, Energy Efficient Codes Coalition; Garrett Stone, Brickfield Burchette Ritts & Stone, PC; Jeff Harris, Alliance to Save Energy; Harry Misuriello, American Council for an Energy-Efficient Economy; and Bill Prindle, Energy Efficient Codes Coalition.

Revise as follows:

R403.1 (N1103.1) Controls (Mandatory). ~~At least one thermostat shall be provided for each separate heating and cooling system.~~ Heating and cooling system controls shall comply with Sections R403.1.1 through R403.1.3.

R403.1.1 (N1103.1.1) Thermostat (Mandatory). Not less than one thermostat shall be provided for each separate heating and cooling system.

~~**R403.1.1 (N1103.1.1)**~~ **R403.1.2 (N1103.1.2) Programmable thermostat (Mandatory).** Where the primary heating system is a forced-air furnace, at least one thermostat per dwelling unit shall be capable of controlling the heating and cooling system on a daily schedule to maintain different temperature set points at different times of the day. This thermostat shall include the capability to set back or temporarily operate the system to maintain *zone* temperatures down to 55ºF (13ºC) or up to 85ºF (29ºC). The thermostat shall initially be programmed with a heating temperature set point not higher than 70ºF (21ºC) and a cooling temperature set point not lower than 78ºF (26ºC).

~~**R403.1.2 (N1103.1.2)**~~ **R403.1.3 (N1103.1.3) Heat pump supplementary heat (Mandatory).** Heat pumps having supplementary electric-resistance heat shall have controls that, except during defrost, prevent supplemental heat operation when the heat pump compressor can meet the heating load.

R403.2 (N1103.2) Ducts. Ducts and air handlers shall be sealed, tested for leakage and insulated in accordance with Sections R403.2.1 through R403.2.~~3~~6.

~~**R403.2.1 (N1103.2.1) Insulation (Prescriptive).** Supply ducts in attics shall be insulated to a minimum of R-8. All other ducts shall be insulated to a minimum of R-6.~~

> ~~**Exception:** Ducts or portions thereof located completely inside the *building thermal envelope.*~~

R403.2.1 (N1103.2.1) Building cavities (Mandatory). Building framing cavities shall not be used as ducts or plenums.

R403.2.2 (N1103.2.2) Sealing (Mandatory). Ducts, air handlers, and filter boxes shall be sealed. Joints and seams shall comply with either the *International Mechanical Code* or *International Residential Code*, as applicable.

> **Exceptions:**
>
> 1. Air-impermeable spray foam products shall be permitted to be applied without additional joint seals.
> 2. Where a duct connection is made that is partially inaccessible, three screws or rivets shall be equally spaced on the exposed portion of the joint so as to prevent a hinge effect.

3. Continuously welded and locking-type longitudinal joints and seams in ducts operating at static pressures less than 2 inches of water column (500 Pa) pressure classification shall not require additional closure systems.

~~Duct tightness shall be verified by either of the following:~~

1. ~~Postconstruction test: Total leakage shall be less than or equal to 4 cfm (113.3 L/min) per 100 square feet (9.29 m^2) of conditioned floor area when tested at a pressure differential of 0.1 inches w.g. (25 Pa) across the entire system, including the manufacturer's air handler enclosure. All register boots shall be taped or otherwise sealed during the test.~~
2. ~~Rough-in test: Total leakage shall be less than or equal to 4 cfm (113.3 L/min) per 100 square feet (9.29 m^2) of conditioned floor area when tested at a pressure differential of 0.1 inches w.g. (25 Pa) across the system, including the manufacturer's air handler enclosure. All registers shall be taped or otherwise sealed during the test. If the air handler is not installed at the time of the test, total leakage shall be less than or equal to 3 cfm (85 L/min) per 100 square feet (9.29 m^2) of conditioned floor area.~~

   ~~Exception: The total leakage test is not required for ducts and air handlers located entirely within the building thermal envelope.~~

~~**R403.2.3 (N1103.2.3)Building cavities (Mandatory).** Building framing cavities shall not be used as ducts or plenums.~~

R403.2.3 (N1103.2.3) Duct testing (Mandatory). The ductwork in a building or dwelling unit shall be tested for air leakage. Testing shall be conducted at the rough-in stages or post-construction. Testing for duct leakage shall be at a pressure differential of 0.1 inches w.g. (25 Pa) across the entire system, including the manufacturer's air handler enclosure. All register boots shall be taped or otherwise sealed during the test. Testing shall be conducted by an *approved* third party. A written report of the results of the test shall be signed by the party conducting the test and shall be provided to the *code official*.

Exception: Ductwork air leakage testing shall not be required where all ducts and air handlers are located entirely within the *building thermal envelope*.

R403.2.4 (N1103.2.4) Duct leakage (Prescriptive). The total leakage of ducts, where measured in testing accordance with Section R403.2.3, shall meet one of the following requirements:

1. Rough-in test: Total leakage shall be less than or equal to 4 cfm (113.3 L/min) per 100 square feet (9.29 m^2) of conditioned floor area where the air handler is installed at the time of the test. Where the air handler is not installed at the time of the test, the total leakage shall be less than or equal to 3 cfm (85 L/min) per 100 square feet (9.29 m^2) of conditioned floor area.

2. Postconstruction test: Total leakage shall be less than or equal to 4 cfm (113.3 L/min) per 100 square feet (9.29 m^2) of conditioned floor area.

Exception:

~~**R403.2.2.1 (N1103.2.2.1)**~~ **R403.2.5 (N1103.2.5)** ~~**Sealed**~~ **Air handler leakage (Mandatory).** Air handlers shall have a manufacturer's designation for an air leakage of not more than 2 percent of the design air flow rate when tested in accordance with ASHRAE 193.

R403.2.6 (N1103.2.6) Insulation (Prescriptive). Supply ducts in attics shall be insulated to a *R-value* of not less than R-8. All other ducts shall be insulated to a *R-value* of not less than R-6.

Exception: Ducts or portions of ducts located completely inside the *building thermal envelope* shall not be required to be insulated.

TABLE R405.2(1) (N1105.2(1))
SPECIFICATIONS FOR THE STANDARD REFERENCE AND PROPOSED DESIGNS

BUILDING COMPONENT	STANDARD REFERENCE DESIGN	PROPOSED DESIGN
Thermal distribution systems	For ducted thermal distribution systems, the duct leakage rate shall be in accordance with Section R403.2.4 and the duct insulation shall be in accordance with Section R403.2.6. For nonducted thermal distribution systems, a distribution system efficiency, DSE, of 0.88 shall be applied to both the heating and cooling system.	Thermal distribution system efficiency shall be as tested or as specified in Table R405.5.2(2) if not tested. Duct insulation shall be as proposed.

(Portions of Table not shown remain unchanged)

Reason: The purpose of this code change is to make a number of improvements to the provisions of the code related to HVAC system controls and ducts. However, it should be noted that this proposal does not change or tighten required values for tested duct leakage, which were initially set in the 2009 *IECC* and tightened in the 2012 *IECC*. The proposed improvements include:

- Reorganize section R403.1 to clearly specify requirements for controls (no change proposed in substantive requirements for this section).
- Reorganize section R403.2 regarding duct sealing, testing and leakage requirements, including the following substantive changes:
  - Clarify that for required testing, such testing must be conducted by a code official-approved third party; and
  - Convert the duct leakage rate from a mandatory to prescriptive requirement (allowing duct leakage to be traded off under the performance path). Note that testing is still mandatory.
- Revise Table R405.5.2(1) to establish a baseline in the Standard Reference Home for duct leakage/distribution system efficiency. The baseline was incorrectly deleted in 2012.

This proposal maintains the efficiency provided by the improved duct leakage rate set in the 2012 *IECC*, and it improves the transparency and objectivity by requiring that testing be administered by a third party. This proposal also creates a practical solution for situations in which a completed duct system fails the leakage test, by allowing the duct performance shortfall to be offset by other improvements under section R405. This is an important consideration where the on-site testing requirement is already set at a tight level. As a result, this proposal adds flexibility for the builder and increased compliance at no additional energy cost. This proposal also reorganizes the subsections related to systems and ducts to add more clarity and simplicity to the code.

Cost Impact: The code change proposal will increase the cost of construction.

RE99-13

Public Hearing:	Committee:	AS	AM	D
	Assembly:	ASF	AMF	DF

R403.1-EC-DEAN-HARRIS-MISURIELLO-PRINDLE-STONE.DOC

RE100-13

R403.1 (IRC N1103.1), R403.1.1 (New) (IRC N1103.1 (New)), R403.1.2 (N1103.1.2),

Proponent: Jeff Sonne, Florida Solar Energy Center representing the Florida Solar Energy Center (jeff@fsec.ucf.edu)

Revise as follows:

R403.1 (N1103.1) Controls. ~~(Mandatory).~~ ~~At least one thermostat shall be provided for each separate heating and cooling system.~~ Controls for heating and cooling systems shall be in accordance with Sections R403.1.1 through R403.1.3.

R403.1.1 (N1103,1,1) Thermostat provision (Mandatory). Each separate heating and cooling system shall be provided with not less than one thermostat.

~~R403.1.1 (N1103.1.1)~~ R403.1.2 (N1103.1.2) Programmable thermostat (Prescriptive). Where the primary heating system ~~is~~ has a forced-air ~~furnace~~ distribution system, at least one thermostat per dwelling unit shall be capable of controlling the heating and cooling system on a daily schedule to maintain different temperature set points at different times of the day. This thermostat shall include the capability to set back or temporarily operate the system to maintain zone temperatures down to 55°F (13°C) or up to 85°F (29°C). The thermostat shall initially be programmed with a heating temperature set point no higher than 70°F (21°C) and a cooling temperature set point no lower than 78°F (26°C).

~~R403.1.2 (N1103.1.2)~~ R403.1.3 (N1103.1.3) Heat pump supplementary heat (Mandatory). Heat pumps having supplementary electric-resistance heat shall have controls that, except during defrost, prevent supplemental heat operation when the heat pump compressor can meet the heating load.

Reason: Although Section R403.1 Controls, is labeled as Mandatory, it is unclear whether all control requirements are. Table R405.5.2(1) specifies a manual thermostat for Section R405 (performance) compliance. The proposed language would clarify that programmable thermostats are required for prescriptive compliance by Section R402.1 (if the primary heating system is forced-air), but they are not required for Section R405 (performance) compliance (whether the primary heating system is forced-air or not). "Furnace" is replaced with "distribution system" so that forced air heat pumps are also included in this requirement.

Cost Impact: The code change proposal will not increase the cost of construction.

RE100-13

Public Hearing:	Committee:	AS	AM	D
	Assembly:	ASF	AMF	DF

R403.1-EC-SONNE.DOC

RE101-13
R403.1.1 (IRC N1103.1.1)

Proponent: Michael J. Early, PD&R, U.S. Department of Housing and Urban Development (michael.j.early@hud.gov)

Revise as follows:

R403.1.1 (N1103.1.1) Programmable thermostat. Where the primary heating system is a forced air furnace, at least one thermostat per dwelling unit shall be capable of controlling the heating and cooling system on a daily schedule to maintain different temperature set points at different times of the day. The thermostat shall be located on an interior wall within the dwelling unit, in an area that is exposed to the dwelling unit's general airflow and at a location that minimizes the duration that the thermostat is exposed to direct sunlight. The thermostat shall not be in close proximity to the dwelling unit's exterior doors, exterior windows, cooking appliances, cooling appliances, supply vents and heating or cooling devices. This thermostat shall include the capability to set back or temporarily operate the system to maintain *zone* temperatures down to 55ºF (13ºC) or up to 85ºF (29ºC). The thermostat shall initially be programmed with a heating temperature set point no higher than 70ºF (21ºC) and a cooling temperature set point no lower than 78ºF (26ºC).

Reason: Providing a more prescribed location for a dwelling's thermostat will help regulate the temperature more accurately and also benefit occupants financially by expending less energy.

By positioning the thermostat in a location that avoids direct sunlight and is away from the dwelling's supply vents, devices, and applications, the number of inadvertent temperature fluctuations that the thermostat observes will decrease. In turn, by decreasing the number of fluctuations, the dwelling's heating and cooling systems will cycle on and off less frequently, thereby extending the systems' lifespan and creating more comfortable temperatures.

Cost Impact: The code change will not increase the cost of construction.

RE101-13

Public Hearing:	Committee:	AS	AM	D
	Assembly:	ASF	AMF	DF

R403.1.1 #1-EC-EARLY.DOC

RE102-13
R403.1.1 (IRC N1103.1.1)

Proponent: Michael J. Early, PD&R, U.S. Department of Housing and Urban Development (michael.j.early@hud.gov)

Revise as follows:

R403.1.1 (N1103.1.1) Programmable thermostat. Where the primary heating system is a forced air furnace, at least one thermostat per dwelling unit shall be capable of controlling the heating and cooling system on a daily schedule to maintain different temperature set points at different times of the day. The thermostat shall be located not greater than 44 inches (1120 mm) above the floor. This thermostat shall include the capability to set back or temporarily operate the system to maintain zone temperatures down to 55ºF (13ºC) or up to 85ºF (29ºC). The thermostat shall initially be programmed with a heating temperature set point no higher than 70ºF (21ºC) and a cooling temperature set point no lower than 78ºF (26ºC).

Reason: Provide more reachable access for occupants with disabilities to regulate the temperature of a dwelling.
Placing the thermostat at a height of not greater than 44 inches (1120 mm) from the floor is in accordance with ADA Accessibility Guidelines for Buildings and Facilities (ADAAG), and provides a convenient location for occupants to observe the dwelling's temperature conditions and make necessary adjustments. As per section 308.2.2 and 308.3.2 of ADAAG (see the following link)

(http://www.ada.gov/regs2010/2010ADAStandards/2010ADAStandards.pdf)

the maximum high forward and parallel reaches allowed for objects mounted on the wall above an obstruction are 44 inches (1120 mm) and 46 inches (1170 mm), respectively.

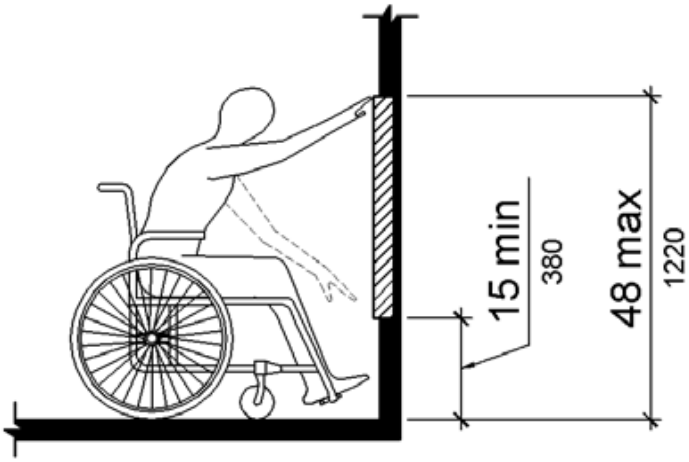

Figure 308.2.1
Unobstructed Forward Reach

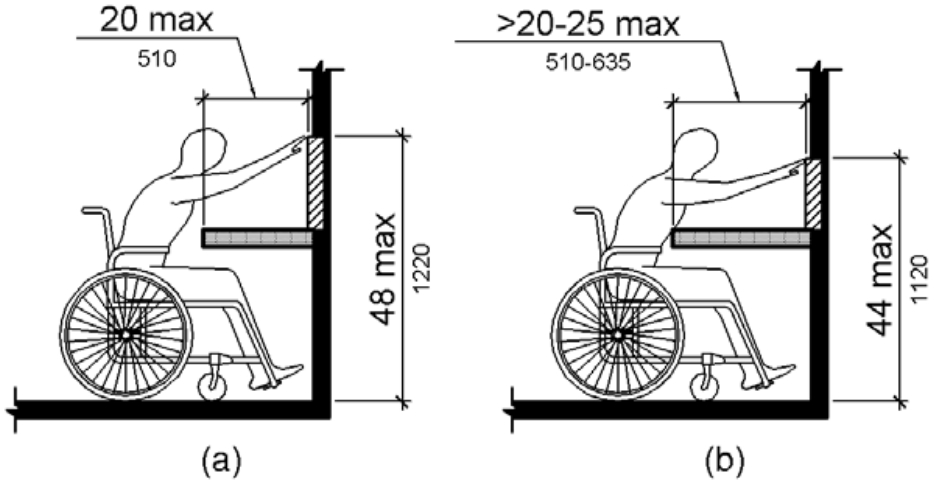

Figure 308.2.2
Obstructed High Forward Reach

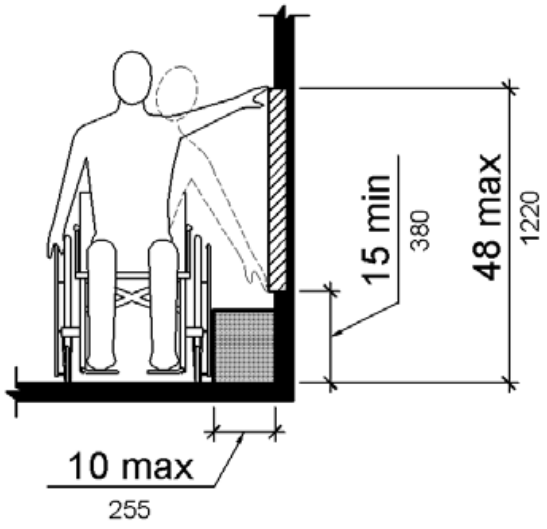

Figure 308.3.1
Unobstructed Side Reach

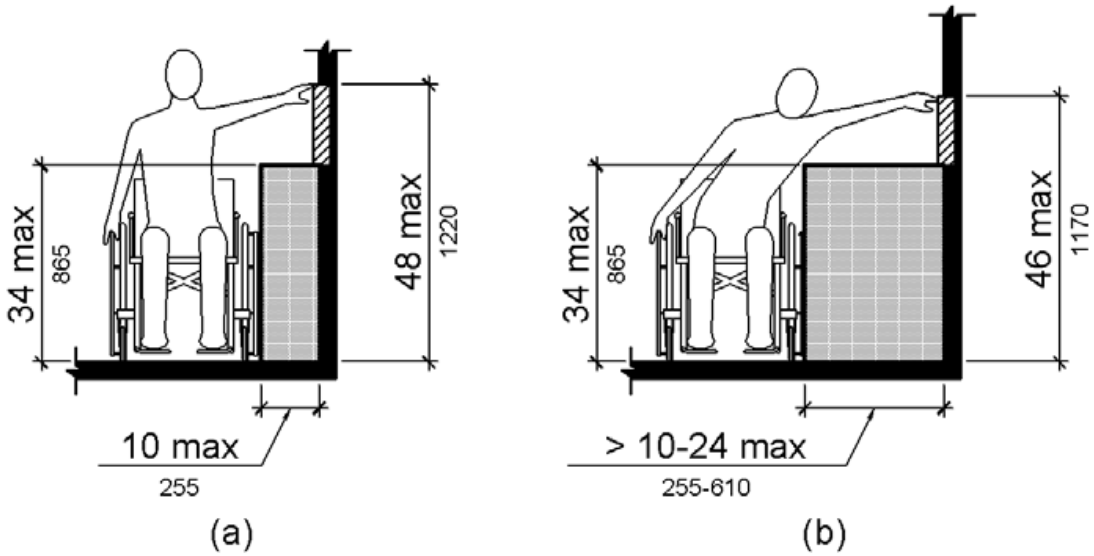

Figure 308.3.2
Obstructed High Side Reach

Cost Impact: The code change will not increase the cost of construction.

RE102-13

Public Hearing:	Committee:	AS	AM	D
	Assembly:	ASF	AMF	DF

R403.1.1 #2-EC-EARLY.DOC

RE103-13
R403.1.1 (IRC N1103.1.1)

Proponent: Dr. Thomas D. Culp, Birch Point Consulting LLC, representing self (culp@birchpointconsulting.com)

Revise as follows:

R403.1.1 (N1103.1.1) Programmable thermostat. Where the primary heating system is a forced-air furnace, at least one thermostat per dwelling unit shall be capable of controlling the heating and cooling system on a daily schedule to maintain different temperature set points at different times of the day. This thermostat shall include the capability to set back or temporarily operate the system to maintain *zone* temperatures down to 55°F (13°C) or up to 85°F (29°C). The thermostat shall initially be programmed <u>by the manufacturer</u> with a heating temperature set point no higher than 70°F (21°C) and a cooling temperature set point no lower than 78°F (26°C).

Reason: When this requirement was added to the 2009 IECC, the last sentence about initial programmed set points was really intended for manufacturer design, so that the thermostat would be ready to go "out of the box". However, there have been reports that this sentence adds extra compliance work for code officials who have to spend time checking and in some cases programming the thermostat set points. This proposal clarifies that this requirement is the manufacturer's responsibility, so that ultimately all thermostats on the market will come already in compliance with this section.

Cost Impact: None, or possible decrease in compliance time / costs.

RE103-13

Public Hearing:	Committee:	AS	AM	D
	Assembly:	ASF	AMF	DF

R403.1.1 -EC-CULP.DOC

RE104-13
R403.1.1 (IRC N1103.1.1)

Proponent: Craig Conner, Building Quality representing self (craig.conner@mac.com)

Delete without substitution:

~~**R403.1.1 (N1103.1.1) Programmable thermostat**. Where the primary heating system is a forced-air furnace, at least one thermostat per dwelling unit shall be capable of controlling the heating and cooling system on a daily schedule to maintain different temperature set points at different times of the day. This thermostat shall include the capability to set back or temporarily operate the system to maintain zone temperatures down to 55°F (13°C) or up to 85°F (29°C). The thermostat shall initially be programmed with a heating temperature set point no higher than 70°F (21°C) and a cooling temperature set point no lower than 78°F (26°C).~~

Reason: Research shows programmable thermostats don't save energy. Multiple studies of actual use show that those with and without programmable thermostats setback with about equal frequency and have about the same average house temperature. Turns out people without setback thermostats often setback manually, and some people with setback thermostats do not use them. The IECC should not include requirements that don't save energy.

Energy Star acknowledged the lack of impact by removing programmable thermostats. "*The ENERGY STAR specification for programmable thermostats was suspended on December 31, 2009 and the ENERGY STAR label is no longer available for this category."* http://www.energystar.gov/index.cfm?c=archives.thermostats_spec

The thermostat required by this section differs from the thermostat specified in the performance calculation in Table R405.5.2(1).

References:

"An Unexpected Setback for Programmable Thermostats" Energy Design Update (11/2000). Monic Nevuis, Wisconsin Energy Center.

"Surprise! There Are People Inside Those Buildings" Energy Design Update (1/2001). Craig Conner and Robert Lucas, Pacific Northwest National Laboratory.

"Automatic Setback Thermostats: Measure Persistence and Customer Behavior" Proceedings of the 1997 International Energy Program Evaluation Conference, Chicago, August 27-29, 1997. David Cross and David Judd..

Cost Impact: The code change proposal will not increase the cost of construction.

RE104-13

Public Hearing:	Committee:	AS	AM	D
	Assembly:	ASF	AMF	DF

R403.1.1-EC-CONNER.DOC

RE105-13
R403.1.1 (IRC N1103.1.1)

Proponent: Ellen Eggerton, representing Virginia Building and Code Officials Association

Revise as follows:

R403.1.1 (N1103.1.1) Programmable thermostat. ~~Where the primary heating system is a forced air furnace, at least one thermostat per~~ The thermostat controlling the primary heating or cooling system of the dwelling unit shall be capable of controlling the heating and cooling system on a daily schedule to maintain different temperature set points at different times of the day. This thermostat shall include the capability to set back or temporarily operate the system to maintain *zone* temperatures down to 55°F (13°C) or up to 85°F (29°C). The thermostat shall initially be programmed with a heating temperature set point no higher than 70°F (21°C) and a cooling temperature set point no lower than 78°F (26°C).

Reason: This suggested change recognizes that forced air heating and air conditioning systems are not the only systems that may benefit from programmable thermostats. Hydronic, radiant electric, and solar thermal systems could also be programmed for night or "unoccupied" setback periods. The proposal concurrently clarifies that the primary heating or cooling system, at minimum, is the system that should receive the programmable thermostat. This clarification is necessary for those residential dwelling units that have multiple systems; e.g., first floor / second floor forced air systems, or radiant electric systems with thermostats in each room. Which system must have a programmable thermostat? It is the "primary" system, typically the one serving the largest area of the dwelling, but subject to reasonable interpretation by the Building Official. Impact of this proposal may be to reduce installation of unnecessary programmable thermostats in multiple H/AC systems.

Cost Impact: If the non-forced air system would otherwise have a non-programmable thermostat installed, then this proposal will increase the cost of construction. However, programmable thermostats are becoming more standard in the marketplace for new residential construction, so the cost impact is effectively zero. Cost differentials when purchasing a programmable vs. non-programmable thermostat are minimal.

RE105-13

Public Hearing:	Committee:	AS	AM	D
	Assembly:	ASF	AMF	DF

R403.1.1-EC-EGGERTON.DOC

RE106-13
R403.1.2 (IRC N1103.1.2)

Proponent: Eric Makela / Britt/Makela Group, Inc./ representing Northwest Energy Codes Group
Eric@BrittMakela.com

Revise as follows:

R403.1.2 (N1103.1.2) Heat pump supplementary heat (Mandatory). ~~Heat pumps having supplementary electric-resistance heat shall have controls that, except during defrost, prevent supplemental heat operation when the heat pump compressor can meet the heating load.~~ Unitary air cooled heat pumps shall include controls that minimize supplemental heat usage during start-up, set-up and defrost conditions. The controls shall anticipate need for heat and use compression heating as the first stage of heat. The controls shall indicate when supplemental heating is being used through visual means such as a light emitting diode indicator. Heat pumps equipped with supplementary heaters shall be installed with controls that prevent supplemental heater operation at outdoor temperatures greater than 40°F (4.4 °C). The auxiliary heat lock out control shall be set at 35°F (1.7°C)or less at final inspection.

Reason: The current language in the 2012 IECC requiring heat pump thermostats that is fairly general. The language requires a thermostat for heat pumps and includes language that outlines the general intent of the control but does not provide the level of detail needed to enforce the provision. The proposed language provides guidance on what to inspect for to determine of the supplemental heat is on. The proposed language also provides a temperature setpoint for when the supplemental heat is allowed to come on to satisfy the load (40°F). The existing language states that the control must prevent supplemental heat operation when the heat pump can meet the heating load but without a specific temperature threshold the provision is unenforceable. The proposed language is from the Washington State Residential Energy Code and has been field tested.

Cost Impact: The code change proposal will not increase the cost of construction.

RE106-13

Public Hearing:	Committee:	AS	AM	D
	Assembly:	ASF	AMF	DF

R403.1.2-EC-MAKELA.DOC

RE107-13
R403.2.1 (IRC N1103.2.1)

Proponent: Shaunna Mozingo, City of Cherry Hills Village, representing Colorado Chapter of ICC, Inc. smozingo@coloradocode.net

Revise as follows:

R403.2.1 (N1103.2.1) Insulation (Prescriptive).Supply and return ducts in attics shall be insulated to a minimum of R-8. ~~All other ducts~~ Supply and return ducts in other portions of the building shall be insulated to a minimum of R-6.

Exception: Ducts or portions thereof located completely inside the building thermal envelope.

Reason: The requirement as written is commonly misinterpreted to say that all supply ducts in attics are insulated to R-8 and all other ducts in attics, including bathroom exhausts, returns, etc are insulated to R-6 when in fact, the intent was that the supply ducts in attics get R-8 and the supplies in other unconditioned spaces in the building, such as garages, ventilated crawl spaces, etc, get R-6. Also, the ducts should not be limited to supplies but should include return ducts as well. This intent is called out much more clearly in the commercial section of the code.

Cost Impact: The code change proposal will not increase the cost of construction.

RE107-13

Public Hearing:	Committee:	AS	AM	D
	Assembly:	ASF	AMF	DF

R403.2.1-EC-MOZINGO.DOC

RE108-13
R403.2.1 (IRC N1103.2.1)

Proponent: Michael Schmeida, Divisional Manager- Sustainability and Government/Regulatory Affairs; Tremco Commercial Sealants and Waterproofing, Beachwood, Ohio (mschmeida@tremcoinc.com)

Revise as follows:

R403.2.1 (N1103.2.1) Insulation (Prescriptive). Supply ducts in attics shall be insulated to a minimum of R-8. All other ducts shall be insulated to a minimum of R-6.

~~**Exception:** Ducts or portions thereof located completely inside the *building thermal envelope.*~~

Reason: The loss of heating or cooling through uninsulated ducts, while not an energy loss to the outside of the thermal envelope, can result in extra run time of HVAC equipment to compensate for air of the proper/intended temperature not reaching the desired occupied areas.

Cost Impact: The cost impact would be <$1000 depending on design. ROI is not determined at this time.

RE108-13

Public Hearing:	Committee:	AS	AM	D
	Assembly:	ASF	AMF	DF

R403.2.1-EC-SCHMEIDA.DOC

RE109-13

R403.2 (IRC N1103.2), R403.2.2 (IRC N1103.2.2), R403.2.3 (NEW) (IRC N1103.2.3 (NEW)), R403.2.4 (NEW) (IRC N1103.2.4 (NEW))

Proponent: Craig Conner, Building Quality representing self (craig.conner@mac.com)

Revise as follows:

R403.2 (N1103.2) Ducts. Ducts and air handlers shall be in accordance with Sections R403.2.1 through ~~R403.2.3~~ R403.2.5.

R403.2.2 (N1103.2.2) Sealing (Mandatory). Ducts, air handlers, and filter boxes shall be sealed. Joints and seams shall comply with either the International Mechanical Code or International Residential Code, as applicable.

Exceptions:

1. Air-impermeable spray foam products shall be permitted to be applied without additional joint seals.

2. Where a duct connection is made that is partially inaccessible, three screws or rivets shall be equally spaced on the exposed portion of the joint so as to prevent a hinge effect.

3. Continuously welded and locking-type longitudinal joints and seams in ducts operating at static pressures less than 2 inches of water column (500 Pa) pressure classification shall not require additional closure systems.

~~Duct tightness shall be verified by either of the following:~~

~~1. Postconstruction test: Total leakage shall be less than or equal to 4 cfm (113.3 L/min) per 100 square feet (9.29 m2) of conditioned floor area when tested at a pressure differential of 0.1 inches w.g. (25 Pa) across the entire system, including the manufacturer's air handler enclosure. All register boots shall be taped or otherwise sealed during the test.~~

~~2. Rough-in test: Total leakage shall be less than or equal to 4 cfm (113.3 L/min) per 100 square feet (9.29 m2) of conditioned floor area when tested at a pressure differential of 0.1 inches w.g. (25 Pa) across the system, including the manufacturer's air handler enclosure. All registers shall be taped or otherwise sealed during the test. If the air handler is not installed at the time of the test, total leakage shall be less than or equal to 3 cfm (85 L/min) per 100 square feet (9.29 m2) of conditioned floor area.~~

~~**Exception**: The total leakage test is not required for ducts and air handlers located entirely within the building thermal envelope.~~

R403.2.3 (N1103.2.3) Duct testing (Mandatory). Ducts shall be pressure tested to determine air leakage by one of the following methods:

1. Postconstruction test: Total leakage shall be measured with a pressure differential of 0.1 inches w.g. (25 Pa) across the entire system, including the manufacturer's air handler enclosure. All register boots shall be taped or otherwise sealed during the test.

2. Rough-in test: Total leakage shall be measured with a pressure differential of 0.1 inches w.g. (25 Pa) across the system, including the manufacturer's air handler enclosure if installed at the time of the test. All registers shall be taped or otherwise sealed during the test.

Exception: A duct air leakage test shall not be required where the ducts and air handlers are located entirely within the building thermal envelope.

A written report of the results of the test shall be signed by the party conducting the test and provided to the *code official*.

R403.2.4 (N1103.2.4) Duct leakage (Prescriptive). The total leakage of the ducts, where measured in accordance with Section R403.2.3, shall be as follows:

1. Postconstruction test: The total leakage shall be less than or equal to 4 cfm (113.3 L/min) per 100 square feet (9.29 m^2) of conditioned floor area.

2. Rough-in test: The total leakage shall be less than or equal to 4 cfm (113.3 L/min) per 100 square feet (9.29 m^2) of conditioned floor area where the air handler is installed at the time of the test. Where the air handler is not installed at the time of the test, the total leakage shall be less than or equal to 3 cfm (85 L/min) per 100 square feet (9.29 m^2) of conditioned floor area.

~~R403.2.3~~ R403.2.5 (~~N1103.2.3~~ N1103.2.5) Building cavities (Mandatory). Building framing cavities shall not be used as ducts or plenums.

Reason: This is exactly the online draft DOE posted. DOE put it well in their reason statement as posted online with the change above:

"The proposal simply changes the duct leakage requirements from mandatory to prescriptive, while retaining the testing requirement and duct construction specifications. Changing the duct leakage rate from mandatory to prescriptive will allow builders the option of trading improvements in other building components for less stringent pressure test results or vice versa. This provides flexibility in meeting the requirements and options for recovering from an unexpected test failure. "

Cost Impact: The code change proposal will not increase the cost of construction.

RE109-12

Public Hearing:	Committee:	AS	AM	D
	Assembly:	ASF	AMF	DF

R403.2.2-EC-CONNER.DOC

RE110-13
R403.2.2 (IRC N1103.2.2)

Proponent: Amanda Hickman, InterCode Inc. representing DuctMate Industries (amanda@intercodeinc.com)

Revise as follows:

R403.2.2 (N1103.2.2) Sealing (Mandatory). Ducts, air handlers, and filter boxes shall be sealed. Joints and seams shall comply with either the *International Mechanical Code* or *International Residential Code*, as applicable.

Exceptions:

1. Air-impermeable spray foam products shall be permitted to be applied without additional joint seals.
2. Where a duct connection is made that is partially inaccessible, three screws or rivets shall be equally spaced on the exposed portion of the joint so as to prevent a hinge effect.
3. ~~Continuously welded and locking-type longitudinal joints and seams in ducts operating at static pressures less than 2 inches of water column (500 Pa) pressure classification shall not require additional closure systems.~~

Duct tightness shall be verified by either of the following:

1. Postconstruction test: Total leakage shall be less than or equal to 4 cfm (113.3 L/min) per 100 square feet (9.29 m^2) of conditioned floor area when tested at a pressure differential of 0.1 inches w.g. (25 Pa) across the entire system, including the manufacturer's air handler enclosure. All register boots shall be taped or otherwise sealed during the test.
2. Rough-in test: Total leakage shall be less than or equal to 4 cfm (113.3 L/min) per 100 square feet (9.29 m^2) of conditioned floor area when tested at a pressure differential of 0.1 inches w.g. (25 Pa) across the system, including the manufacturer's air handler enclosure. All registers shall be taped or otherwise sealed during the test. If the air handler is not installed at the time of the test, total leakage shall be less than or equal to 3 cfm (85 L/min) per 100 square feet (9.29 m^2) of conditioned floor area.

Exception: The total leakage test is not required for ducts and air handlers located entirely within the building thermal envelope.

Reason: The requirements for low pressure duct sealing were clarified in the International Mechanical Code in M151-12 (proposed by the PMG Code Action Committee). M151-12 was approved by the voting membership in Portland for the 2015 IMC.

Currently, low pressure duct sealing is addressed in the IMC, two places in the IECC, and in the IRC. Identical language in the IECC is not necessary since it defers to the IMC and the IRC (for residential mechanical).

If the code sections in the IMC, IRC, and IECC are not maintained cycle after cycle, inconsistencies can develop between the sections. It is more efficient to simply eliminate the sections altogether in the IECC since they are redundant.

A similar proposal is being submitted to the 2015 IECC Commercial chapter for consistency.

Cost Impact: The code change proposal will not increase the cost of construction.

RE110-13

Public Hearing:	Committee:	AS	AM	D
	Assembly:	ASF	AMF	DF

R403.2.2-EC-HICKMAN.DOC

RE111-13
R403.2.2 (IRC N1103.2.2)

Proponent: Vickie Lovell InterCode Inc. representing DuctMate Industries (vickie@intercodeinc.com)

Revise as follows:

R403.2.2 (N1103.2.2) Sealing (Mandatory). Ducts, air handlers, and filter boxes shall be sealed. Joints and seams shall comply with either the *International Mechanical Code* or *International Residential Code*, as applicable.

Exceptions:

1. Air-impermeable spray foam products shall be permitted to be applied without additional joint seals.
2. Where a duct connection is made that is partially inaccessible, three screws or rivets shall be equally spaced on the exposed portion of the joint so as to prevent a hinge effect.
3. ~~Continuously welded and locking-type longitudinal joints and seams in ducts operating at static pressures less than 2 inches of water column (500 Pa) pressure classification shall not require additional closure systems.~~ For ducts having a static pressure classification of less than 2 inches of water column (500 Pa), additional closure systems shall not be required for continuously welded joints and seams, and locking-type joints and seams of other than the snap-lock and button-lock types.

Duct tightness shall be verified by either of the following:

1. Postconstruction test: Total leakage shall be less than or equal to 4 cfm (113.3 L/min) per 100 square feet (9.29 m^2) of conditioned floor area when tested at a pressure differential of 0.1 inches w.g. (25 Pa) across the entire system, including the manufacturer's air handler enclosure. All register boots shall be taped or otherwise sealed during the test.
2. Rough-in test: Total leakage shall be less than or equal to 4 cfm (113.3 L/min) per 100 square feet (9.29 m^2) of conditioned floor area when tested at a pressure differential of 0.1 inches w.g. (25 Pa) across the system, including the manufacturer's air handler enclosure. All registers shall be taped or otherwise sealed during the test. If the air handler is not installed at the time of the test, total leakage shall be less than or equal to 3 cfm (85 L/min) per 100 square feet (9.29 m^2) of conditioned floor area.

Exception: The total leakage test is not required for ducts and air handlers located entirely within the building thermal envelope.

Reason: This proposed text is derived from a revision to the International Mechanical Code that was proposed by the PMG Code Action Committee in M151-12 and was approved by the voting membership in Portland for the 2015 IMC. That reason statement is supplied below:

"Unless sealant or a gasket is used, snap-lock and button-lock type seams will leak significantly. The current exception attempted to prevent unnecessary sealing for joints and seams that leak very little or not at all, but it went too far by including all locking type joints and seams. Some locking joints are leakproof such as mechanically folded seams used for spiral seam duct, but this cannot be said for all locking joints."

The identical proposal is being submitted to the 2015 IECC commercial requirements for consistency.

Cost Impact: The code change proposal will not increase the cost of construction.

RE111-13

Public Hearing:	Committee:	AS	AM	D
	Assembly:	ASF	AMF	DF

R403.2.2-EC-LOVELL.DOC

RE112-13
R403.2.2 (IRC N1103.2.2)

Proponent: Eric Makela / Britt/Makela Group, Inc./ representing Northwest Energy Codes Group (Eric@BrittMakela.com)

Revise as follows:

R403.2.2 (N1103.2.2) Sealing (Mandatory). Ducts, air handlers, and filter boxes shall be sealed. Joints and seams shall comply with either the *International Mechanical Code* or *International Residential Code*, as applicable.

Exceptions:

1. Air-impermeable spray foam products shall be permitted to be applied without additional joint seals.
2. Where a duct connection is made that is partially inaccessible, three screws or rivets shall be equally spaced on the exposed portion of the joint so as to prevent a hinge effect.
3. Continuously welded and locking-type longitudinal joints and seams in ducts operating at static pressures less than 2 inches of water column (500Pa) pressure classification shall not require additional closure systems.

Duct tightness shall be verified by either of the following:

1. Postconstruction test: Leakage to outdoors shall be less than or equal to 4 cfm (113.3 L/min) per 100 square feet (9.29 m^2) of conditioned floor area or ~~t~~total leakage shall be less than or equal to 4 cfm (113.3 L/min) per 100 square feet (9.29 m^2) of conditioned floor area when tested at a pressure differential of 0.1 inches w.g. (25 Pa) across the entire system, including the manufacturer's air handler enclosure. All register boots shall be taped or otherwise sealed during the test.

2. Rough-in test: Total leakage shall be less than or equal to 4 cfm (113.3 L/min) per 100 square feet (9.29 m^2) of conditioned floor area when tested at a pressure differential of 0.1 inches w.g. (25 Pa) across the system, including the manufacturer's air handler enclosure. All registers shall be taped or otherwise sealed during the test. If the air handler is not installed at the time of the test, total leakage shall be less than or equal to 3 cfm (85 L/min) per 100 square feet (9.29 m^2) of conditioned floor area.

Exception: The total leakage test is not required for ducts and air handlers located entirely within the building thermal envelope.

Reason: Allowing for duct leakage to the outside will give both HVAC installers and homeowners an accurate measurement of duct leaks to the exterior of the building. Duct leakage to the outdoors is an accepted duct testing method in the industry and was allowed under Section 403.2.2 of the 2009 IECC. The proposed leakage rate is set at 4 cfm per 100 square feet of conditioned floor area which consistent with the 2012 requirements for total duct leakage.

Cost Impact: The code change proposal will not increase the cost of construction.

RE112-13

Public Hearing:	Committee:	AS	AM	D
	Assembly:	ASF	AMF	DF

R403.2.2-EC-MAKELA.DOC

RE113-13
R403.2.2 (IRC N1103.2.2)

Proponent: Michael Schmeida, Divisional Manager- Sustainability and Government/Regulatory Affairs, representing Tremco Commercial Sealants and Waterproofing, Beachwood, Ohio (mschmeida@tremcoinc.com)

Revise as follows:

R403.2.2 (N1103.2.2) Sealing (Mandatory). Ducts, air handlers, and filter boxes shall be sealed. Joints and seams shall comply with either the *International Mechanical Code* or *International Residential Code*, as applicable.

Exceptions:

1. Air-impermeable spray foam products shall be permitted to be applied without additional joint seals.
2. Where a duct connection is made that is partially inaccessible, three screws or rivets shall be equally spaced on the exposed portion of the joint so as to prevent a hinge effect.
3. Continuously welded and locking-type longitudinal joints and seams in ducts operating at static pressures less than 2 inches of water column (500 Pa) pressure classification shall not require additional closure systems.

Duct tightness shall be verified by either of the following:

1. Postconstruction test: Total leakage shall be less than or equal to 4 cfm (113.3 L/min) per 100 square feet (9.29 m^2) of conditioned floor area when tested at a pressure differential of 0.1 inches w.g. (25 Pa) across the entire system, including the manufacturer's air handler enclosure. All register boots shall be taped or otherwise sealed during the test.
2. Rough-in test: Total leakage shall be less than or equal to 4 cfm (113.3 L/min) per 100 square feet (9.29 m^2) of conditioned floor area when tested at a pressure differential of 0.1 inches w.g. (25 Pa) across the system, including the manufacturer's air handler enclosure. All registers shall be taped or otherwise sealed during the test. If the air handler is not installed at the time of the test, total leakage shall be less than or equal to 3 cfm (85 L/min) per 100 square feet (9.29 m^2) of conditioned floor area.

   ~~**Exception:** The total leakage test is not required for ducts or air handlers located entirely within the building thermal envelope.~~

Reason: The loss of heating or cooling through improperly sealed ducts, while not an energy loss to the outside of the thermal envelope, can result in extra run time of HVAC equipment to compensate for air of the proper/intended temperature not reaching the desired occupied areas.

Cost Impact: The cost impact would be <$1000 depending on design. ROI is variable depending on climate, design, etc., but is estimated in many studies at 1 -2 years.

RE113-13

Public Hearing:	Committee:	AS	AM	D
	Assembly:	ASF	AMF	DF

R403.2.2-EC-SCHMEIDA.DOC

RE114-13
R403.2.2 (IRC N1103.2.2), Chapter 5

Proponent: Jeff Sonne, Florida Solar Energy Center representing the Florida Solar Energy Center (jeff@fsec.ucf.edu)

Revise as follows:

R403.2.2 (N1103.2.2) Sealing (Mandatory). Ducts, air handlers, and filter boxes shall be sealed. Joints and seams shall comply with either the *International Mechanical Code* or *International Residential Code,* as applicable.

Exceptions:

1. Air-impermeable spray foam products shall be permitted to be applied without additional joint seals.
2. Where a duct connection is made that is partially inaccessible, three screws or rivets shall be equally spaced on the exposed portion of the joint so as to prevent a hinge effect.
3. Continuously welded and locking-type longitudinal joints and seams in ducts operating at static pressures less than 2 inches of water column (500 Pa) pressure classification shall not require additional closure systems.

Duct tightness shall be verified <u>by testing in accordance with Section 803 of the RESNET Standards, The allowable leakage shall be one</u> ~~by either~~ of the following:

1. Postconstruction test: Total leakage shall be less than or equal to 4 cfm (113.3 L/min) per 100 square feet (9.29 m^2) of conditioned floor area when tested at a pressure differential of 0.1 inches w.g. (25 Pa) across the entire system, including the manufacturer's air handler enclosure. All register boots shall be taped or otherwise sealed during the test.

2. Rough-in test: Total leakage shall be less than or equal to 4 cfm (113.3 L/min) per 100 square feet (9.29 m^2) of conditioned floor area when tested at a pressure differential of 0.1 inches w.g. (25 Pa) across the system, including the manufacturer's air handler enclosure. All registers shall be taped or otherwise sealed during the test. If the air handler is not installed at the time of the test, total leakage shall be less than or equal to 3 cfm (85 L/min) per 100 square feet (9.29 m^2) of conditioned floor area.

Exception: The total leakage test is not required for ducts and air handlers located entirely within the building thermal envelope.

Add new standard to Chapter 5 (IRC Chapter 44) as follows:

<u>RESNET</u> <u>Residential Energy Services Network, Inc.</u>
<u>P.O. Box 4561</u>
<u>Oceanside, CA 92052-4561</u>

<u>RESNET Standards-2013</u> <u>RESNET Mortgage Industry National Home Energy Rating Standards.</u>

Reason: RESNET Section 803 is the only standard available that addresses single-point testing, including error analysis, and that does not require both pressurization and depressurization testing to meet the standard.

Cost Impact: The code change proposal will not increase the cost of construction.

Analysis: A review of the standards proposed for inclusion in the code, RESNET Standards, with regard to the ICC criteria for referenced standards (Section 3.6 of CP#28) will be posted on the ICC website on or before April 1, 2013.

RE115-13

R403.2.2 (IRC N1103.2.2), R403.2.2.1 (NEW) (IRC N1103.2.2.1 (NEW)), R403.2.2.2 (NEW) (IRC N1103.2.2.2 (NEW)), R403.2.2.3 (NEW) (IRC N1103.2.2.3 (NEW))

Proponent: Don Surrena, CBO, National Association of Home Builders (NAHB) (dsurrena@nahb.org)

Revise as follows:

R403.2.2 (N1103.2.2) Sealing ~~(Mandatory)~~. Ducts, air handlers, and filter boxes shall be sealed and tested in accordance with Sections R403.2.2.1 through R403.2.1.3. ~~Joints and seams shall comply with either the International Mechanical Code or International Residential Code, as applicable.~~

~~**Exceptions:**~~

~~1. Air-impermeable spray foam products shall be permitted to be applied without additional joint seals.~~
~~2. Where a duct connection is made that is partially inaccessible, three screws or rivets shall be equally spaced on the exposed portion of the joint so as to prevent a hinge effect.~~
~~3. Continuously welded and locking-type longitudinal joints and seams in ducts operating at static pressures less than 2 inches of water column (500 Pa) pressure classification shall not require additional closure systems.~~

~~Duct tightness shall be verified by either of the following:~~

~~1. Postconstruction test: Total leakage shall be less than or equal to 4 cfm (113.3 L/min) per 100 square feet (9.29 m2) of conditioned floor area when tested at a pressure differential of 0.1 inches w.g. (25 Pa) across the entire system, including the manufacturer's air handler enclosure. All register boots shall be taped or otherwise sealed during the test.~~
~~2. Rough-in test: Total leakage shall be less than or equal to 4 cfm (113.3 L/min) per 100 square feet (9.29 m2) of conditioned floor area when tested at a pressure differential of 0.1 inches w.g. (25 Pa) across the system, including the manufacturer's air handler enclosure. All registers shall be taped or otherwise sealed during the test. If the air handler is not installed at the time of the test, total leakage shall be less than or equal to 3 cfm (85 L/min) per 100 square feet (9.29 m2) of conditioned floor area.~~

~~**Exception**: The total leakage test is not required for ducts and air handlers located entirely within the building thermal envelope.~~

R403.2.2.1 (N1103.2.2.1) Construction (Mandatory). Ducts, air handlers, and filter boxes shall be sealed. Joints and seams shall comply with either the *International Mechanical Code* or *International Residential Code*, as applicable.

Exceptions:

1. Where air-impermeable spray foam products are applied to ducts, air handlers and filter boxes, joints and seams covered by such products shall not be required to be sealed in accordance with *International Mechanical Code* and *International Residential Code*.

2. Where a duct connection is made that is partially inaccessible and three screws or rivets, equally spaced, are installed on the exposed portion of the joint, the joint shall not be required to comply with the duct connection mechanical fastening requirement of the *International Mechanical Code* and *International Residential Code*.

3. Continuously welded and locking-type longitudinal joints and seams in ducts that, in operation, have a static pressure of less than 2 inches of water column (500 Pa), shall not require additional closure systems.

R403.2.2.2 (N1103.2.2.2) Duct testing (Mandatory). Ductwork systems shall be tested for air leakage by one of the following methods:

1. Postconstruction test: The total leakage of the ductwork systems shall be measured when tested at a pressure differential of 0.1 inches w.g. (25 Pa) across the entire system, including the manufacturer's air handler enclosure. All register boots shall be taped or otherwise sealed during the test.
2. Rough-in test: The total leakage of the ductwork systems shall be measured when tested at a pressure differential of 0.1 inches w.g. (25 Pa) across the system, including the manufacturer's air handler enclosure where present at the time of the test. All registers shall be taped or otherwise sealed during the test.

Exception: Ductwork leakage tests shall not be required for ducts and air handlers located entirely within the building thermal envelope.

A written report of the results of the test shall be signed by the party conducting the test and provided to the *code official*.

R403.2.2.3 (N1103.2.2.3) Duct leakage (Prescriptive). The total leakage of the ductwork, when tested in accordance with Section R403.2.2.2, shall be as follows:

1. Postconstruction test: The total leakage shall be less than or equal to 4 cfm (113.3 L/min) per 100 square feet (9.29 m^2) of conditioned floor area.
2. Rough-in test: The total leakage shall be less than or equal to 4 cfm (113.3 L/min) per 100 square feet (9.29 m^2) of conditioned floor area where the air handler is present at the time of the test or where the air handler is not present at the time of the test, 3 cfm (85 L/min) per 100 square feet (9.29 m^2) of conditioned floor area.

Exceptions; The total leakage from ductwork and air handlers located entirely within the *building thermal envelope* shall be unlimited.

Reason: These modifications remove the mandatory maximum air tightness requirement and provide designers and builders the flexibility to trade-off duct tightness with other performance path measures when using the performance path. Currently the duct tightness requirements are mandatory and even under ideal circumstances, difficult to achieve. This will provide energy neutral trade-offs for expensive and sometimes unattainable requirements with other building improvements. This proposal does not change the stringency of the code it only increases the flexibility.

Cost Impact: The code change proposal will not increase the cost of construction.

RE115-13

Public Hearing:	Committee:	AS	AM	D
	Assembly:	ASF	AMF	DF

R403.2.2 #1-EC-SURRENA.DOC

RE116-13

R403.2.2 (IRC N1103.2.2), Table R405.5.2(1) (IRC Table N1105.5.2(1))

Proponent: Don Surrena, CBO, National Association of Home Builders (NAHB) (dsurrena@nahb.org)

Revise as follows:

R403.2.2 (N1103.2.2) Sealing (Mandatory). Ducts, air handlers, and filter boxes shall be sealed. Joints and seams shall comply with either the *International Mechanical Code* or *International Residential Code*, as applicable.

Exceptions:

1. Air-impermeable spray foam products shall be permitted to be applied without additional joint seals.
2. Where a duct connection is made that is partially inaccessible, three screws or rivets shall be equally spaced on the exposed portion of the joint so as to prevent a hinge effect.
3. Continuously welded and locking-type longitudinal joints and seams in ducts operating at static pressures less than 2 inches of water column (500 Pa) pressure classification shall not require additional closure systems.

Duct tightness shall be verified by either of the following:

1. Postconstruction test: ~~Total~~ Leakage to the outside of a conditioned space or total leakage shall be less than or equal to 4 cfm (113.3 L/min) per 100 square feet (9.29 m^2) of conditioned floor area when tested at a pressure differential of 0.1 inches w.g. (25 Pa) across the entire system, including the manufacturer's air handler enclosure. All registers ~~boots~~ shall be taped or otherwise sealed during the test.
2. Rough-in test: Total leakage shall be less than or equal to 4 cfm (113.3 L/min) per 100 square feet (9.29 m^2) of conditioned floor area when tested at a pressure differential of 0.1 inches w.g. (25 Pa) across the system, including the manufacturer's air handler enclosure. All registers shall be taped or otherwise sealed during the test. If the air handler is not installed at the time of the test, total leakage shall be less than or equal to 3 cfm (85 L/min) per 100 square feet (9.29 m^2) of conditioned floor area.

Exception: The total leakage test is not required for ducts and air handlers located entirely within the building thermal envelope.

TABLE R405.5.2(1) (N1105.5.2(1))
SPECIFICATIONS FOR THE STANDARD REFERENCE AND PROPOSED DESIGNS

BUILDING COMPONENT	STANDARD REFERENCE DESIGN	PROPOSED DESIGN
Thermal distribution systems		~~Thermal distribution system efficiency shall be as tested or as specified in Table R405.5.2(2) if not tested. Duct insulation shall be as proposed.~~
	Untested distribution systems: DSE = 0.88	Untested distribution systems: DSE from Table R405.5.2(2)
	Tested Ducts: Leakage rate to outside conditioned space as specified Section R403.2.2(1)	Tested Ducts: Tested Leakage rate to outside conditioned space
	Tested duct Location: Unconditioned attic	Duct Location: As proposed
	Tested duct Insulation: in accordance with Section R403.2.1	Duct Insulation: As proposed

Reason: Currently there is no guidance in Table R405.5.2(1) on how to model ducts for the Standard Reference Design when performing a simulated energy performance calculation. Consequently, systems which perform better than the code minimum are not recognized in the performance analysis. Proposed changes provide clarity as to what distribution system efficiency should be applied to the Standard Reference Design and how the ducts should be modeled in the performance path.

The default distribution system efficiency (DSE) is set to 0.88 for untested systems in the standard reference design, which is the established default for ducts located in conditioned space. If ductless or hydronic systems are used, a recognized benefit will result in the performance model.

When a duct system is tested, the standard reference tightness is defined in section R403.2.2(1) (4cfm/100ft2 of CFA). Buildings with ducts tighter than the 4cfm/100ft2 will get credit for performing better than the minimum requirement. In addition, the manufacturers of the modeling software will have clear definition how to model the Standard Reference Designincluding duct placement and insulation level.

Changes in section R403.2.2 make it clear that postconstruction duct testing can be tested to either outside conditioned space or total duct leakage, as determined by the contractor.

Cost Impact: The code change proposal will not increase the cost of construction.

RE116-13

Public Hearing:	Committee:	AS	AM	D
	Assembly:	ASF	AMF	DF

R403.2.2 #2-EC-SURRENA.DOC

RE117-13
R403.2.2 (IRC N1103.2.2)

Proponent: Donald J. Vigneau, AIA, Northeast Energy Efficiency Partnerships, Inc. (NEEP) (dvigneau@neep.org)

Revise as follows:

R403.2.2 (N1103.2.2) Sealing (Mandatory). Ducts, air handlers, and filter boxes shall be sealed. Joints and seams shall comply with either the International Mechanical Code or International Residential Code, as applicable.

Exceptions:

1. Air-impermeable spray foam products shall be permitted to be applied without additional joint seals.
2. Where a duct connection is made that is partially inaccessible, three screws or rivets shall be equally spaced on the exposed portion of the joint so as to prevent a hinge effect.
3. Continuously welded and locking-type longitudinal seams in ducts operating at a static pressure less than 2 inches of water column (500 Pa) pressure classification shall not require additional closure systems.

Duct tightness shall be verified by either of the following options;

1. ~~2~~. Rough-in test: Total leakage shall be less than or equal to 4 cfm (113.3 L/min) per 100 square feet (9.29 m2) of conditioned floor area when tested at a pressure differential of 0.1 inches w.g. (25 Pa) across the entire system, including the manufacturer's air handling enclosure, All register boots shall be taped or otherwise sealed during the test. If the air handler is not installed at the time of the test, total leakage shall be less than or equal to 3 cfm per 100 square feet (9.29 m^2) of conditioned floor area.
2. ~~1~~. Post-construction test: Total leakage shall be less than or equal to 4 cfm (113.3 L/min) per 100 square feet (9.29 m^2) of conditioned floor area when tested at a pressure differential of 0.1 inches w.g. (25 Pa) across the entire system, including the manufacturer's air handling enclosure, All register boots shall be taped or otherwise sealed during the test.

Exception: The total leakage test is not required for ducts and air handlers located entirely within the building thermal envelope.

Reason: Reversing the order of the required testing options places the first option in a preferential position, to lead the user in selection of these required test options. Rough-in testing is the optimum time for the test, as it allows maximum opportunity to inspect the duct sealing, identify and rectify leaks in the sealed joints, and allow for inspections when the completeness of the ductwork assembly can be verified and before concealed spaces are closed in. The remaining openings for terminals and connections can readily be checked at building appliance and equipment installation inspections customarily accomplished shortly before a final inspection.

Reversing the order increases the probability that problems in the duct sealing not only can be more easily found, but also corrected at the best possible time for easy access and reduced costs for the corrections. No revisions to the existing options text is required; only re-numbering.

Note: This is the second code change proposal submitted on the same code section. Each submittal covers different subsections of the code section requirements and the two proposals are not related.

Cost Impact: The code change proposal will not increase the cost of construction.

RE117-13

Public Hearing:	Committee:	AS	AM	D
	Assembly:	ASF	AMF	DF

R403.2.2 #2-EC-VIGNEAU.DOC

RE118-13
R403.2.2 (IRC N1103.2.2)

Proponent: Donald J. Vigneau, AIA, Northeast Energy Efficiency Partnerships, Inc. (NEEP) (dvigneau@neep.org)

Revise as follows:

R403.2.2 (N1103.2.2) Sealing (Mandatory). Ducts, air handlers, and filter boxes shall be sealed. Joints and seams shall comply with either the International Mechanical Code or International Residential Code, as applicable.

Exceptions:

1. Air-impermeable spray foam products shall be permitted to be applied without additional joint seals.
2. Where a duct connection is made that is partially inaccessible, three screws or rivets shall be equally spaced on the exposed portion of the joint so as to prevent a hinge effect.
3. Continuously welded and locking-type longitudinal seams in ducts operating at a static pressure less than 2 inches of water column (500 Pa) pressure classification shall not require additional closure systems.

Duct tightness shall be verified by either of the following <u>options</u>;

1. ~~2~~. Rough-in test: Total leakage shall be less than or equal to 4 cfm (113.3 L/min) per 100 square feet (9.29 m2) of conditioned floor area when tested at a pressure differential of 0.1 inches w.g. (25 Pa) across the entire system, including the manufacturer's air handling enclosure, All register boots shall be taped or otherwise sealed during the test. If the air handler is not installed at the time of the test, total leakage shall be less than or equal to 3 cfm per 100 square feet (9.29 m^2) of conditioned floor area.
2. ~~1~~. Post-construction test: Total leakage shall be less than or equal to 4 cfm (113.3 L/min) per 100 square feet (9.29 m^2) of conditioned floor area when tested at a pressure differential of 0.1 inches w.g. (25 Pa) across the entire system, including the manufacturer's air handling enclosure, All register boots shall be taped or otherwise sealed during the test.

Exception: The total leakage test is not required for ducts and air handlers located entirely within the building thermal envelope.

Reason: Reversing the order of the required testing options places the first option in a preferential position, to lead the user in selection of these required test options. Rough-in testing is the optimum time for the test, as it allows maximum opportunity to inspect the duct sealing, identify and rectify leaks in the sealed joints, and allow for inspections when the completeness of the ductwork assembly can be verified and before concealed spaces are closed in. The remaining openings for terminals and connections can readily be checked at building appliance and equipment installation inspections customarily accomplished shortly before a final inspection.

Reversing the order increases the probability that problems in the duct sealing not only can be more easily found, but also corrected at the best possible time for easy access and reduced costs for the corrections. No revisions to the existing options text is required; only re-numbering.

Note: This is the second code change proposal submitted on the same code section. Each submittal covers different subsections of the code section requirements and the two proposals are not related.

Cost Impact: The code change proposal will not increase the cost of construction.

RE11813

Public Hearing:	Committee:	AS	AM	D
	Assembly:	ASF	AMF	DF

R403.2.2 #2-EC-VIGNEAU.DOC

RE119-13
R403.2.3 (IRC N1103.2.3)

Proponent: Dan Buuck, National Association of Home Builders (NAHB) (dbuuck@nahb.org)

Revise as follows:

R403.2.3 (N1103.2.3) Building cavities (Mandatory). Building framing cavities shall not be used as ducts ~~or plenums~~.

Reason: Right now we have a conflict between this section and the IMC and IRC, both of which allow plenums in stud cavities and joist spaces. There is also an apparent conflict within the IECC: It currently allows stud cavity and joist space plenums in residential occupancies more than three stories in height along with all other commercial buildings.

The general prohibition of plenums has also lost its effectiveness in regards to energy savings. When it was approved for the IECC, using stud spaces in exterior walls as plenums was still allowed. That it is now prohibited (see IRC M1601.1.1), so heat loss is not an issue.

During the Group A hearings a proposal to prohibit plenums in the IMC was not successful. The PMG CAC considered this conflict and decided not to support a proposal that would remove language in the IRC that provides guidance on the safe construction of plenums. This would have put the IRC in conflict with the IMC. States are also removing plenums from this section of the IECC as they adopt the 2012 version.

Cost Impact: The code change proposal will not increase the cost of construction.

RE119-13

Public Hearing:	Committee:	AS	AM	D
	Assembly:	ASF	AMF	DF

R402.2.3-BUUCK.DOC

RE120-13
R403.2.3 (IRC N1103.2.3)

Proponent: Brenda A. Thompson, Clark County Building Department, Las Vegas NV, representing the ICC Sustainability, Energy & High Performance Code Action Committee (SEHPCAC)

Revise as follows:

R403.2.3 (N1103.2.3) Building cavities (Mandatory). Building framing cavities in the *building thermal envelope* shall not be used as ducts or plenums.

Reason: This proposal is submitted by the ICC Sustainability Energy and High Performance Code Action Committee (SEHPCAC). The SEHPCAC was established by the ICC Board of Directors to pursue opportunities to improve and enhance assigned International Codes or portion thereof. This includes both the technical aspects of the codes as well as the code content in terms of scope and application of referenced standards. Since its inception in July, 2011, the SEHPCAC has held 3 open meetings and over 30 workgroup calls which included members of the SEHPCAC as well as any interested party to discuss and debate proposed changes and public comments. Related documentation and reports are posted on the SEHPCAC website at: http://www.iccsafe.org/cs/SEHPCAC/Pages/default.aspx.

This proposal revises Section R403.2.3 to align with the requirements of Section M1601.1.1 of the IRC and Section 602.3 of the IMC, which prohibit building framing cavities in exterior walls to be used as ducts or plenums, but allow framing cavities in interior walls to be used as ducts or plenums. As currently configured these code sections conflict with one another and make enforcement confusing and difficult.

The current language in Section R403.2.2 of the IECC does not allow building cavities in interior walls or floors to be used as ducts. While this section would not prevent such interior walls or floors to be used as ducts or plenums, Section 602.3 of the IMC and Section M1601.1.1 prohibit their use as supply ducts. Therefore, these interior wall and floor building cavities would ultimately be permitted to be used only as return ducts.

Note that the IECC defines *building thermal envelope* as "The *basement walls, exterior walls*, floor, roof and any other building element that enclose *conditioned space* or provides a boundary between *conditioned space* and exempt or unconditioned space."

Also note that, while the *building thermal envelope* is an energy issue, ducts are a mechanical issue and are governed primarily by the IMC and the mechanical chapters of the IRC.

Cost Impact: The code change proposal will decrease the cost of construction.

RE120-13

Public Hearing:	Committee:	AS	AM	D
	Assembly:	ASF	AMF	DF

R403.2.3-EC-THOMPSON-SEHPCAC.DOC

RE121-13
R403.4 (IRC N1103.4), R403.4.1 (NEW) (IRC N1103.4.1 (NEW))

Proponent: Brian Dean, Energy Efficient Codes Coalition; Garrett Stone, Brickfield Burchette Ritts & Stone, PC; Jeff Harris, Alliance to Save Energy; Harry Misuriello, American Council for an Energy-Efficient Economy; and Bill Prindle, Energy Efficient Codes Coalition.

Revise as follows:

R403.4 (N1103.4) Service hot water systems. Energy conservation measures for service hot water systems shall be in accordance with Sections R403.4.1, ~~and~~ R403.4.2 and R403.4.3.

R403.4.1 (N1103.4.1) Service hot water equipment efficiency rating (Mandatory). New or replacement *service water heating* equipment shall have an efficiency rating equal to or greater than the minimum required by federal law for the geographic location where the equipment is installed.

Reason: The purpose of this code change is to codify the requirement that service hot water equipment must satisfy federal minimum requirements for the location. This proposal does not establish new requirements since it simply requires that equipment meet the federal standard, but it allows the code official to enforce the requirements. This proposal improves the effectiveness of the code by reinforcing a practice that should already be taking place in plan review and inspection -- verification of the efficiency rating of service hot water equipment. Although federal rules set the minimum efficiency levels for manufacturers, only code officials can determine whether equipment actually installed in buildings meets or exceeds the federal minimums. We have offered a similar proposal for heating and cooling equipment under section R403.6.

This proposal is more important now than in the past because federal minimums are expected to shift away from single nationwide efficiency levels to regionally-based efficiency levels that will vary from state to state. It is possible, whether by accident or bad intent, to see equipment that would meet federal requirements in one jurisdiction used in other states or regions in which it does not meet the regional requirement. Although this verification may already be taking place, the proposal above is intended to make it a specific requirement in all buildings. This is an important opportunity for federal, state and local governments to work together to ensure that equipment installed meets federal minimums for the location.

Cost Impact: The code change proposal will not increase the cost of construction.

RE121-13

Public Hearing:	Committee:	AS	AM	D
	Assembly:	ASF	AMF	DF

R403.4-EC-DEAN-HARRIS-MISURIELLO-PRINDLE-STONE.DOC

RE122-13

R403.4 (IRC N1103.4), R403.4.3 (NEW) (IRC N1103.4.3 (NEW)), Table R403.4.3 (NEW) (IRC Table N1103.4.3 (NEW))

Proponent: Edward R. Osann, Natural Resources Defense Council, on behalf of self. (eosann@nrdc.org)

Revise as follows:

R403.4 (N1103.4) Service hot water systems. Energy conservation measures for service hot water systems shall be in accordance with Sections R403.4.1, ~~and~~ R403.4.2 and R403.4.3.

R403.4.3 (N1103.4.3) Hot water pipe volume (Mandatory). In a service hot water distribution system, the volume in the piping between the end of a hot water fixture supply and the piping connection to a hot water source shall not exceed 0.5 gallon (1.9 liters). The hot water source shall be a recirculating system pipe, a heat-traced pipe or a water heater. The volume in the piping shall be calculated using the values in Table R403.4.3.

TABLE R403.4.3 (N1103.4.3)
INTERNAL VOLUME OF VARIOUS WATER DISTRIBUTION PIPING

	LIQUID OUNCES OF WATER PER FOOT LENGTH OF HOT WATER TUBING							
Nominal Size (Inches)	Copper Type M	Copper Type L	Copper Type K	CPVC CTS SDR 11	CPVC SCH 40	PEX-AL-PEX ASTM F 1281	PE-AL-PE	PEX CTS SDR 9
⅜	1.06	0.97	0.84	N/A	1.17	0.63	0.63	0.64
½	1.69	1.55	1.45	1.25	1.89	1.31	1.31	1.18
⅝	2.49	2.31	2.22	N/A	N/A	2.12	2.12	1.72
¾	3.43	3.22	2.90	2.67	3.38	3.39	3.39	2.35
1	5.81	5.49	5.17	4.43	5.53	5.56	5.56	3.91
1¼	8.70	8.36	8.09	6.61	9.66	8.49	8.49	5.81
1½	12.18	11.83	11.45	9.22	13.20	13.88	13.88	8.09
2	21.08	20.58	20.04	15.79	21.88	21.48	21.48	13.86

For SI: 1 inch = 25.4 mm, 1 liquid ounce = 0.0296 liters, 1.0 ounce = 0.00781 gallons,
0.5 gallon (1.9 liters) = 64.0 liquid ounces

Reason: Cold or tepid water in the initial draw from a hot water outlet is often unusable for its intended purpose, and is frequently purged, resulting in a waste of water, energy, and time for building occupants. Pipe insulation significantly reduces heat loss and helps to ensure that hot water gets to the shower sooner. However, a complementary strategy is to reduce the volume of water contained in the hot water distribution system in the first place.

This proposal, which is comparable to the criteria adopted by the US EPA WaterSense for New Homes specification in 2009, establishes a maximum volume of 0.5 gallons for water in a hot water supply line, based on internal volumes specific to the piping material. By allowing the volume limitation to be computed from runs from recirculation loops, this provision allows designers additional flexibility while effectively limiting the amount of water to be purged to ½ gallon per draw.

The proposal designates this provision as mandatory. The reason for this is that while the 2012 IECC performance approach allows credit for improving the efficiency of the hot water heat source, no credit is available for features of the hot water distribution system that might actually reduce the amount of hot water used, such as a limitation on hot water supply pipe volume Thus, even though this design criterion will save significant amounts of energy over the life of the building, its energy savings cannot be "scored" or accumulated within the performance framework of the code. If designated "prescriptive", it is likely to be ignored by builders using the performance path since it cannot contribute to compliance under the IECC performance approach. Thus, "mandatory" is the better approach at this time. If and when Section R405 is modified to ensure that the performance path will account for the energy attributes of the hot water distribution system, consideration can be given to removing the mandatory designation from this proposed section.

Cost Impact: This code change proposal is a design requirement that will not increase the cost of construction.

RE122-13

Public Hearing:	Committee:	AS	AM	D
	Assembly:	ASF	AMF	DF

R403.4.2-EC-OSANN.DOC

RE123-13

R202 (IRC N1101.9), R403.4 (IRC N1103.4), R403.4.1 (NEW) (IRC N1103.4.1 (NEW)), Chapter 5

Proponent: Meg Waltner, Natural Resources Defense Council (mwaltner@nrdc.org)

Revise as follows:

R403.4 (N1103.4) Service hot water systems. Energy conservation measures for service hot water systems shall be in accordance with Sections R403.4.1~~ and R403.4.2~~, R403.4.2 and R403.4.3.

R403.4.1 (N1103.4.1) Water heating equipment (Prescriptive). This section shall apply only to buildings in climate zones 1 through 5. *Service water heating* equipment shall be of one or more of the types in the following list. Where replacement of existing *service water heating* equipment is required and the replacement equipment is of the same type as the existing, the replacement shall be have an efficiency that is the same or better than the existing equipment. Where existing equipment is replaced with another type of *service water heating* equipment, the equipment shall be of one or more of the types in the following list.

1. a *desuperheater water heater* listed and labeled to AHRI 470
2. a heat pump water heater a heat pump water heater with an energy factor, EF, of 2.0 or greater
3. a solar water heating system having a solar system heating fraction of 0.50 or greater
4. an instantaneous water heater
5. a fuel-gas fired storage water heater with energy factor, EF, of 0.67 or greater

Add new definition as follows:

IECC SECTION R202 (IRC N1101.9)
GENERAL DEFINITIONS

DESUPERHEATER WATER HEATER. A factory-made assembly of elements by which the flows of refrigerant vapor and water are maintained in a heat transfer relationship so that the refrigerant vapor is desuperheated and the water is heated.

Add new standard to Chapter 5 as follows:

AHRI

470-06 Performance Rating of Desuperheater/Water Heaters

Reason: As shown in the attached analysis prepared by the Department of Energy, there are cost effective ways to achieve significant energy savings in service water heating systems in climate zones 1-5 compared to standard-efficiency storage electric and fuel-fired heaters. The proposed change offers multiple options for compliance with the new requirement. Cost-effective measures should be included in the IECC as a measure of sound energy policy and to protect consumers from unnecessarily high future energy costs.

Water Heaters

Description

Residential envelopes have been getting tighter and better over the last few years. As a result, domestic water heating energy is emerging as a significant end-use from the efficiency stand-point. There are multiple ways of improving the efficiency of generating hot water in homes. DOE analyzed some of the more common methods – for homes with gas water heaters, water heaters with Energy factor (EF) greater than the federal minimum baseline and tankless water heaters are analyzed; for homes with electric water heaters, heat-pump water heaters are analyzed. Desuperheaters are analyzed for all cases.

The Life Cycle cost analysis uses the DOE Cost Effectiveness Methodology[1] for assessing cost effectiveness. This analysis has been carried out for the single family prototype, for 15 locations, one foundation type and one heating system except the heat pump water heater analysis which is carried out for homes with electric resistance and heat pump space heating. Table 1 indicates the

location cost indices provided by Faithful and Gould (2011)[1] used to reflect local construction costs. Recent residential fuel prices specific to each location summarized in Table 2 are used for energy cost calculations. These have been obtained from the DOE Energy Information Administration.[2,3]

Table 1: Cost multipliers by State

Location	State	Climate Zone	Moisture Regime	multiplier
Miami	FL	1	moist	0.884
Phoenix	AZ	2	dry	0.928
Houston	TX	2	moist	0.837
El Paso	TX	3	dry	0.837
San Francisco	CA	3	marine	1.142
Memphis	TN	3	moist	0.863
Albuquerque	NM	4	dry	0.903
Salem	OR	4	marine	1.038
Baltimore	MD	4	moist	0.956
Boise	ID	5	dry	0.918
Chicago	IL	5	moist	1.069
Helena	MT	6	dry	0.936
Burlington	VT	6	moist	0.933
Duluth	MN	7	moist	1.06
Fairbanks	AK	8	moist	1.336

High efficiency gas storage water heaters

This concept looks at the energy savings potential of high efficiency storage water heater. The residential prototype is presently equipped with a 40 gallon hot water heater. Federal minimum efficiency requirements were revised in 2010 and compliance with the required standards for water heaters is required from April 2015. The new rule requires 40 gallon gas storage water heaters to have an EF of 0.615[2]. An EF of 0.67 is analyzed in this concept.

Table 2: Fuel Costs by State

Location	State	Climate Zone	Moisture Regime	Electricity-winter ($/kWh)	Electricity-summer ($/kWh)	Gas ($/thm)	Oil ($/MBtu)
Miami	FL	1	moist	0.117	0.117	1.532	23.7
Phoenix	AZ	2	dry	0.099	0.117	1.306	23.7
Houston	TX	2	moist	0.11	0.12	0.814	23.7
El Paso	TX	3	dry	0.11	0.12	0.814	23.7
San Francisco	CA	3	marine	0.149	0.156	0.943	23.7
Memphis	TN	3	moist	0.095	0.095	0.862	23.7
Albuquerque	NM	4	dry	0.099	0.116	0.791	23.7
Salem	OR	4	marine	0.091	0.092	1.174	23.7
Baltimore	MD	4	moist	0.134	0.151	1.039	23.7
Boise	ID	5	dry	0.078	0.084	0.869	23.7
Chicago	IL	5	moist	0.108	0.122	0.717	23.7

[1]Faithful + Gould. 2011. *Residential Energy Efficiency Measures – Locations Factors*. Portland, Oregon. http://bc3.pnnl.gov/wiki/index.php/Downloads

[2] http://www1.eere.energy.gov/buildings/appliance_standards/residential/pdfs/htgp_finalrule_fedreg.pdf

Helena	MT	6	dry	0.091	0.096	0.795	23.7
Burlington	VT	6	moist	0.158	0.155	1.433	23.13
Duluth	MN	7	moist	0.103	0.108	0.833	23.7
Fairbanks	AK	8	moist	0.166	0.171	0.839	23.7

Energy Cost Savings

Figure 1 below shows energy cost savings for each climate zone.

Cost Effectiveness

The cost for high efficiency water heaters were derived from the Technical Support document and Life Cycle Cost (LCC) spreadsheets for the Appliance Standards rule-making for water heaters[3][4]. These costs are blended for retrofits and new construction. To generate costs specific to new construction alone, the Crystal Ball (CB) analysis was re-run with the fractions set to 100% new construction and 0% retrofits.

The total installed cost for a 40 gallon gas storage water heater with EF 0.62 works out to $1609 while the total installed cost for a 40 gallon gas storage water heater with EF 0.67 works out to $1468. This unexpected drop in costs is due to lower venting costs associated with the high efficiency water heater. The baseline requires natural draft venting which has higher costs than the plastic power venting apparatus required by the high efficiency water heater.

It can be concluded that using a higher efficiency water heater not only saves energy during its life, but also costs less to install. This measure is thus, cost-effective.

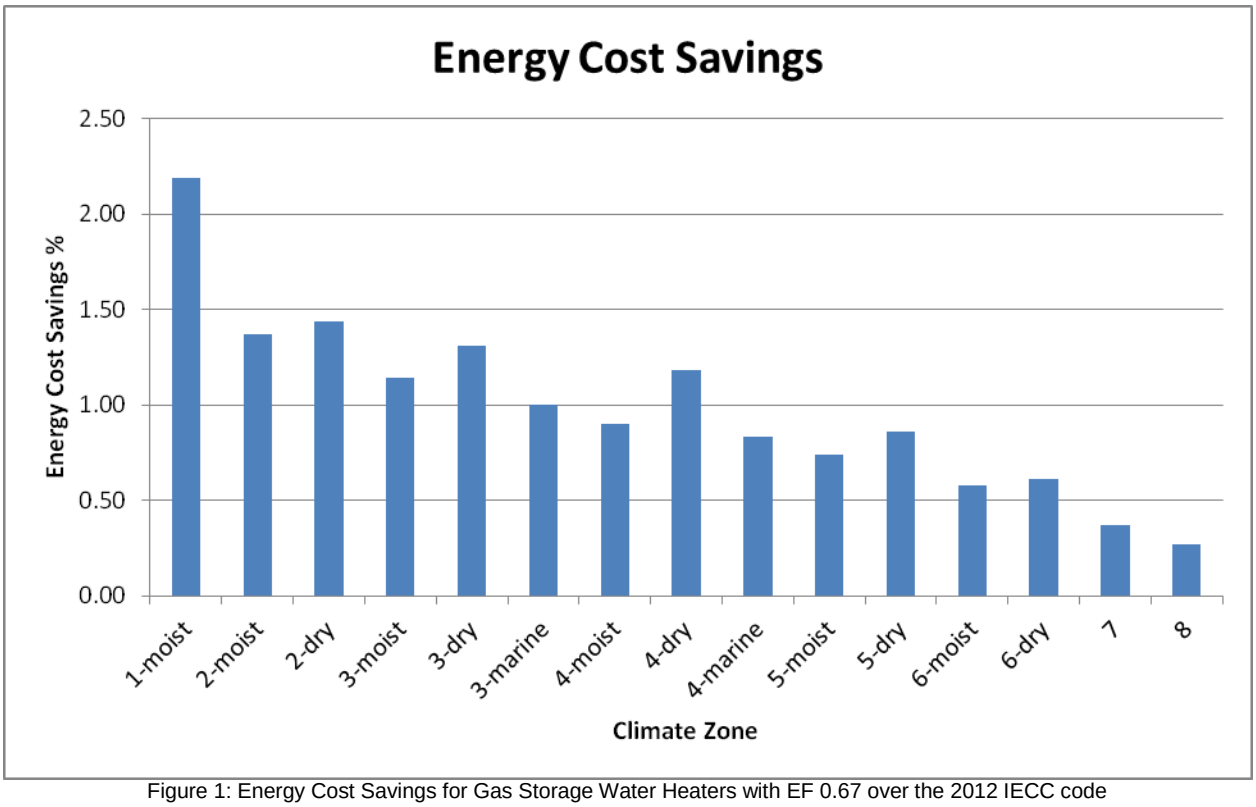

Figure 1: Energy Cost Savings for Gas Storage Water Heaters with EF 0.67 over the 2012 IECC code

[3] http://www1.eere.energy.gov/buildings/appliance_standards/residential/heating_products_fr_tsd.html

[4] http://www1.eere.energy.gov/buildings/appliance_standards/residential/heating_products_fr_spreadsheets.html

Tankless Water Heaters

The most common type of water heaters in residences are storage type. Stand-by losses are associated with storage tank water heaters because hot water draws are inconsistent in homes. This concept looks at tankless type of water heaters, which eliminate the stand-by losses almost entirely. Tankless water heaters have a small storage tank, usually 1 gallon, which has a small associated stand-by loss. Tankless water heaters with an Energy Factor (EF) of 0.82, which is the minimum EF for EnergyStar tankless water heaters[5], are analyzed in this concept.

There is some evidence that instantaneous water heaters don't perform at their rated efficiency when subjected to realistic hot water draw profiles, i.e., shorter draws that occur frequently during a typical day in residences. To account for this reduction in performance, the assumed EF of instantaneous water heaters is reduced to 92% of its value[6].

Energy Cost Savings

Figure 2 below shows energy cost savings for each climate zone.

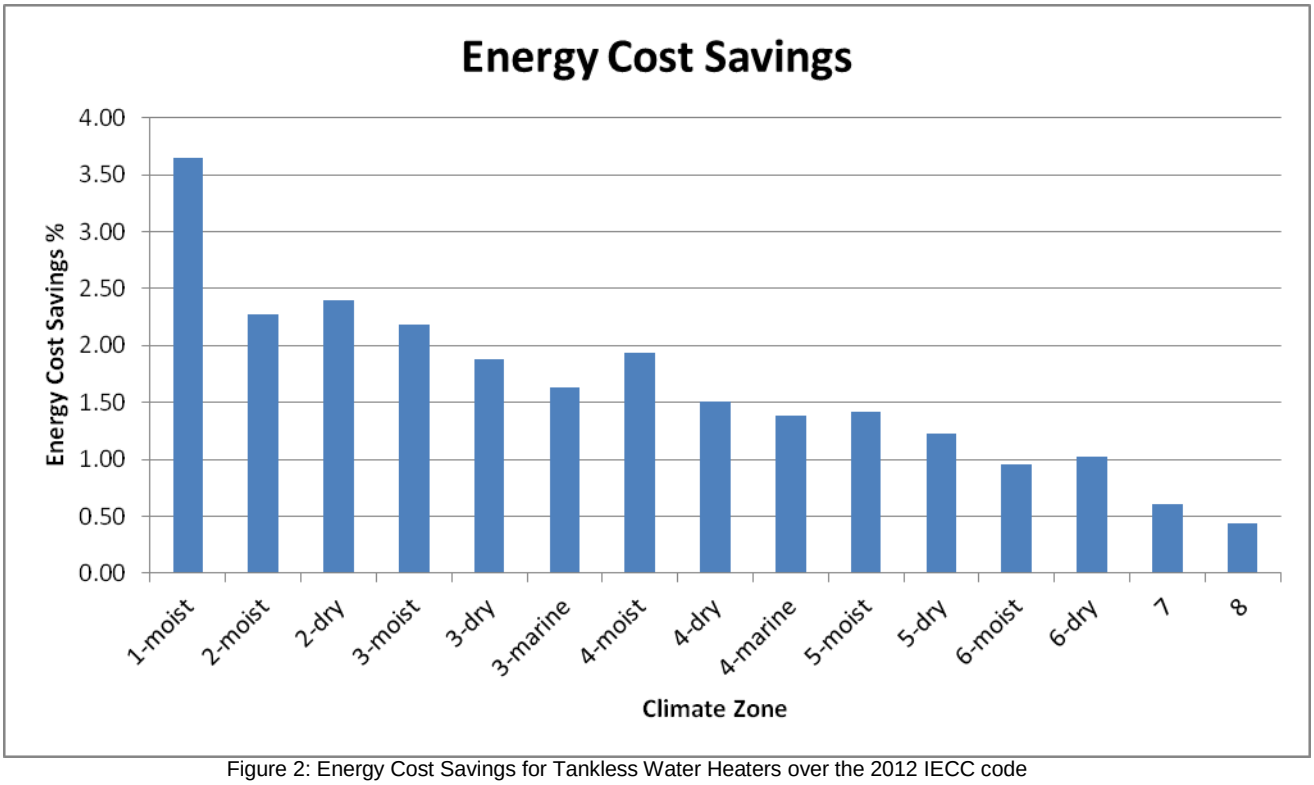

Figure 2: Energy Cost Savings for Tankless Water Heaters over the 2012 IECC code

Cost Effectiveness

The costs for gas fired instantaneous water heaters are derived from the Technical Support document and Life Cycle Cost (LCC) spreadsheets for the Appliance Standards rule-making for water heaters. These costs are blended for retrofits and new construction. To generate costs specific to new construction alone, the Crystal Ball (CB) analysis was re-run with the fractions set to 100% new construction and 0% retrofits.

The total installed cost for a 40 gallon gas storage water heater with EF 0.62 works out to $1609 while the total installed cost for a gas fired instantaneous water heater with EF 0.82 works out to $2376. Figure 3 below shows the Life Cycle Cost for this measure across all climate zones. Tankless water heaters turn out to be cost effective in the warmer climate zones but not so much as we move to the colder climate zones.

[5] EnergyStar website http://www.energystar.gov/index.cfm?c=water_heat.pr_crit_water_heaters
[6] RESNET reduction factor for the EF of instantaneous water heaters

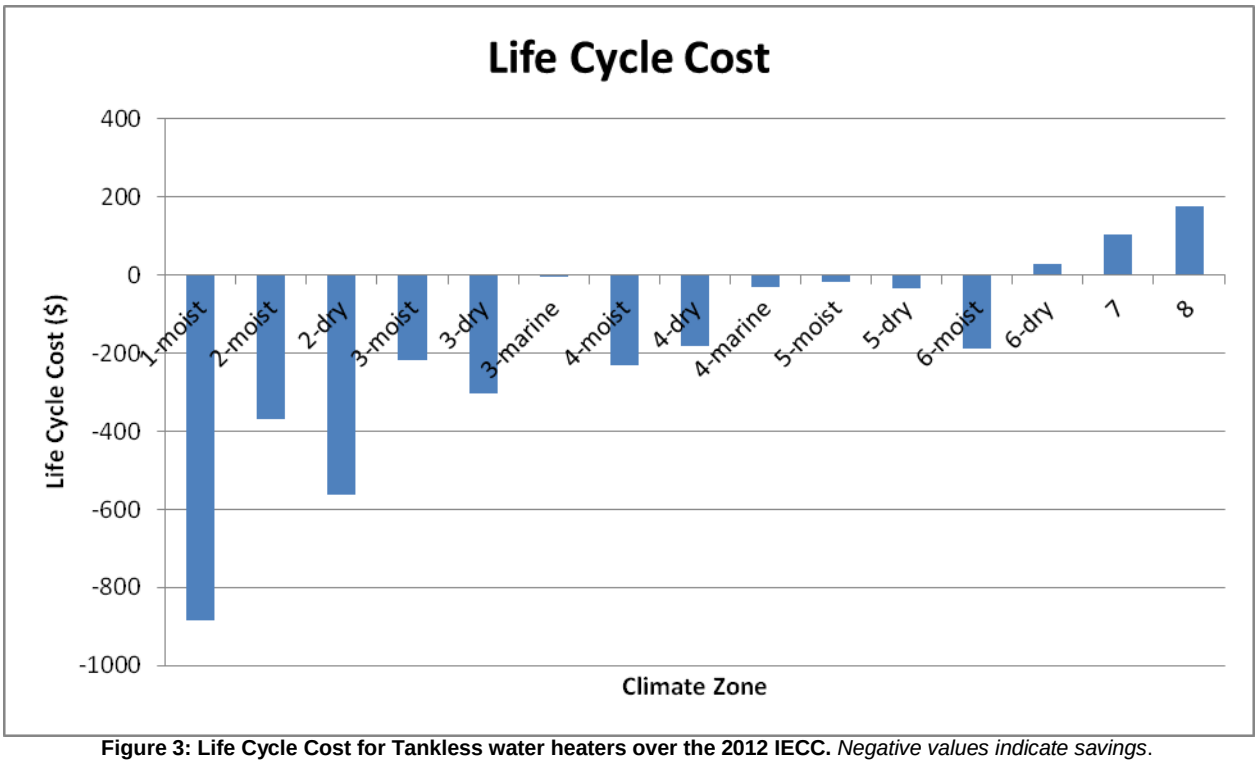

Figure 3: Life Cycle Cost for Tankless water heaters over the 2012 IECC. *Negative values indicate savings*.

Heat-Pump Water Heaters

Heat-Pump water heaters (HPWH) combine the elements of a heat-pump and a water heater. HPWHs extract heat from the surrounding space and use it to heat water. As a result, they provide the dual benefit of cooling a space while providing the required hot water. DOE considered a HPWH with EF 2.0 for this concept.

The HPWH is assumed to be located inside the conditioned living space. Water heaters are usually placed in unconditioned garages or in closets inside a conditioned space. In order to perform effectively, HPWHs require sufficient surrounding space for heat exchange which may not always be available within a conditioned space. Due to the nature of HPWHs, they perform much better within conditioned spaces in cooling dominated climates. HPWHs are simulated in all climate zones in this analysis.

Energy Cost Savings

Figure 4 below shows energy cost savings for each climate zone.

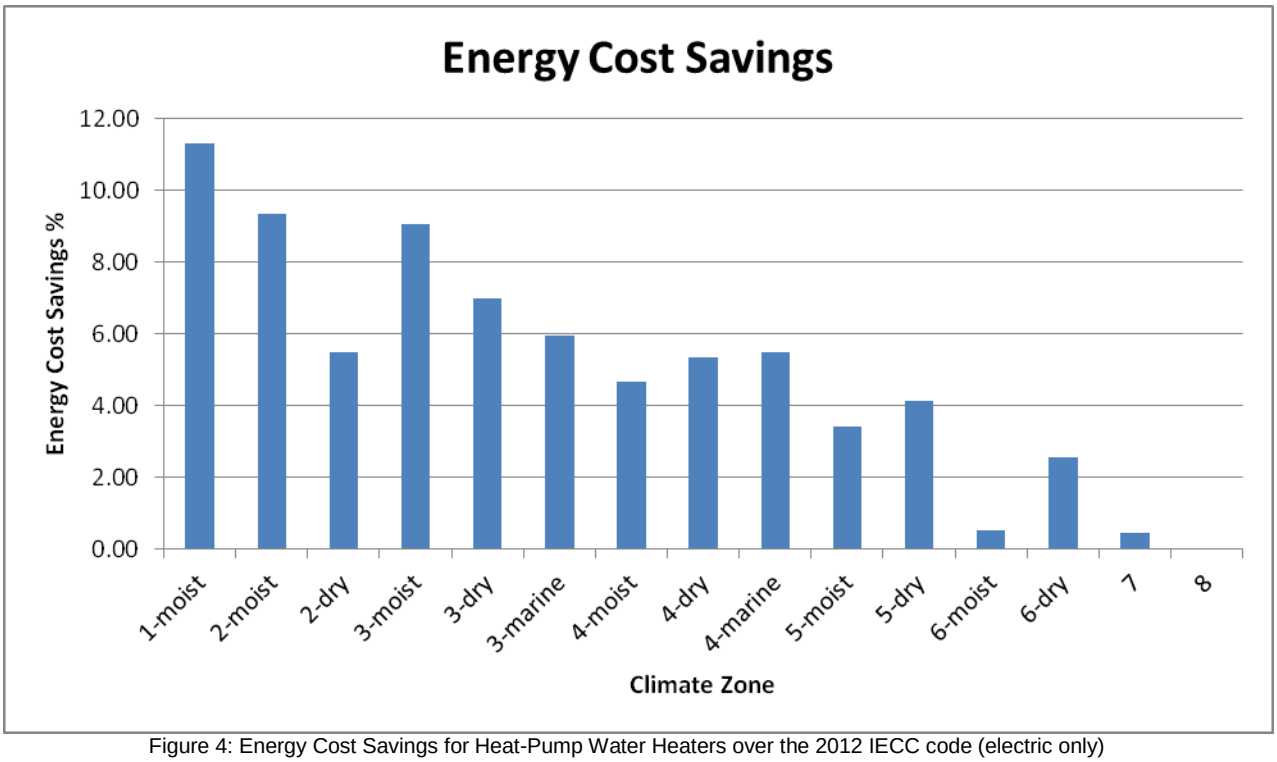

Figure 4: Energy Cost Savings for Heat-Pump Water Heaters over the 2012 IECC code (electric only)

Cost Effectiveness

The cost for high efficiency water heaters were derived from the Technical Support document and Life Cycle Cost (LCC) spreadsheets for the Appliance Standards rule-making for water heaters. These costs are blended for retrofits and new construction. To generate costs specific to new construction alone, the Crystal Ball (CB) analysis was re-run with the fractions set to 100% new construction and 0% retrofits.

According to this data, the installed cost of 40 gallon Electric Storage Water Heaters with EF 0.95 is $688 and that of an EF 2.35 Heat Pump Water Heater is $1697. State cost multipliers from table 2 are used to generate incremental costs by state. Figure 5 below shows the Life Cycle Cost Savings from this measure. According to our analysis, Heat-Pump water heaters in place of electric storage water heaters are cost effective in all zones.

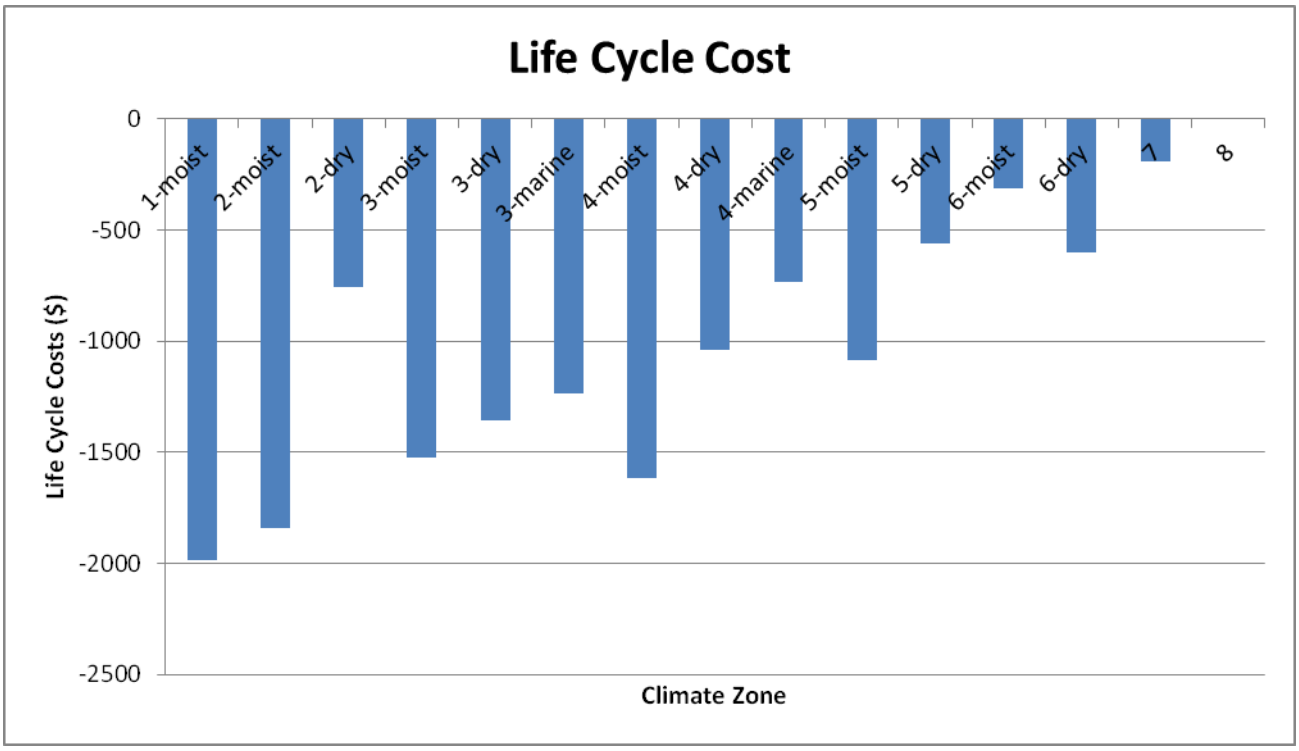

Figure 5: Life Cycle Cost for the concept over the 2012 IECC. *Negative values indicate savings*.

Desuperheaters

During summer operation, the heat removed from the refrigerant would normally be rejected to the atmosphere. Using this heat in the hot water system, therefore, results in significant energy savings because hot water heating is performed at a reduced energy input (greatly reduced in some cases). Heat supplied to the water during winter operation (in the heating season) is not "free" as in the cooling mode, because that heat would normally be used to satisfy space heating demands. However, energy savings are possible because the water heating takes place at an advantageous coefficient of performance (COP).

Energy Cost Savings

Figure 6 below shows energy cost savings for each climate zone. Desuperheaters are most effective for cooling dominated climate zones as it operates only when the air conditioner is running. Hence the expected the energy savings are much higher for CZ 1-3, with decreasing savings for the colder climate zones.

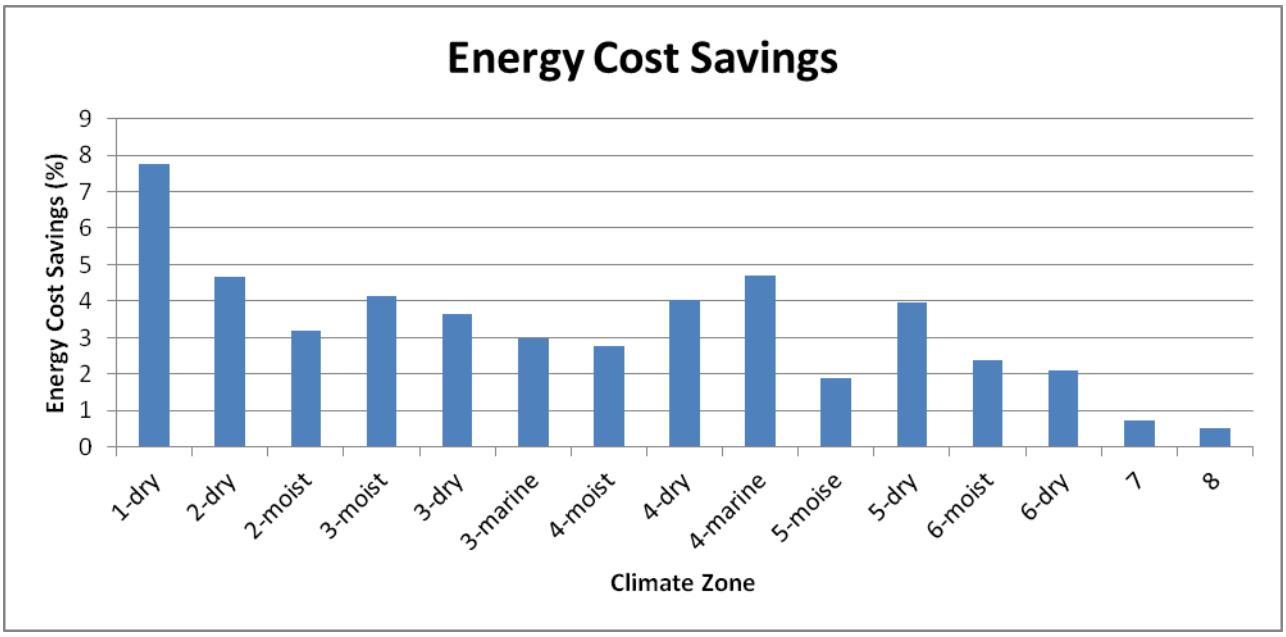

Figure 6: Energy Cost Savings over the 2012 IECC code for Desuperheaters

Cost Effectiveness

Data available online documents the cost of equipment at $500 with installation costs ranging from $500-$1000.[7] [8] An incremental cost of $1250 has been assumed for both equipment and installation.

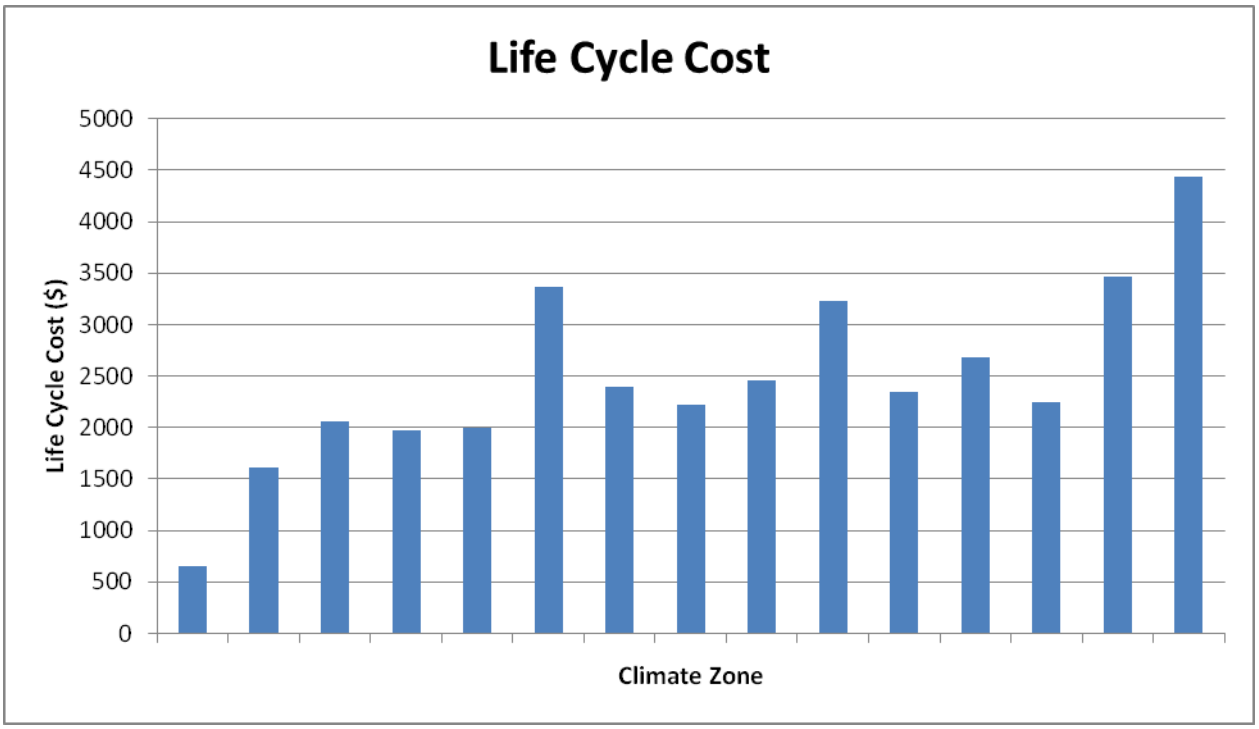

Figure 7: Life Cycle Costs over the 2012 IECC code for Desuperheaters

[7] http://bc3.pnnl.gov/wiki/index.php/Desuperheaters_(0004)
[8] NW Council Cots on Desuperheaters. August 2008, Regional Technical Forum.

Cost Impact: The code change proposal will increase the cost of construction.

Analysis: A review of the standards proposed for inclusion in the code, AHRI 470 with regard to the ICC criteria for referenced standards (Section 3.6 of CP#28) will be posted on the ICC website on or before April 1 2013.

RE123-13

Public Hearing:	Committee:	AS	AM	D
	Assembly:	ASF	AMF	DF

R403.4-EC-WALTNER.DOC

RE124-13
R403.4.1 (IRC N1103.4.1)

Proponent: Gary Klein, Affiliated International Management, LLC, representing self, gary@aim4sustainability.com

Revise as follows:

R403.4.1 (N1103.4.1) ~~Circulating~~ ~~hot~~ Heated water system~~s~~ controls (Mandatory).
Circulating ~~hot~~ heated water systems and heat trace temperature maintenance systems shall be provided with ~~an automatic or *readily accessible* manual switch~~ controls that can ~~turn off the hot-water circulating pump when the system is not in use~~ automatically adjust either system in accordance with the times when heated water is used in the occupancy. Automatic controls, temperature sensors and pumps shall be *accessible*. Manual controls shall be *readily accessible*.

Reason: The first reason for this change is to broaden the scope of the section to include both circulating heated water systems and heat trace temperature maintenance systems. The second reason is to distinguish between controls that need to be *accessible* from those than need to be *readily accessible*.

Cost Impact: The code change proposal will not increase the cost of construction.

RE124-13

Public Hearing:	Committee:	AS	AM	D
	Assembly:	ASF	AMF	DF

R403.4.1 #1-EC-KLEIN

RE125-13

R403.4.1 (IRC N1103.4.1), R403.4.1.1 (NEW) (IRC N1103.4.1.1 (NEW)), R403.4.1.2 (NEW) (IRC N1103.4.1.2 (NEW)), Chapter 5, IPC [E] 607.2.1, [E] 607.2.1.1 (NEW), [E] 607.2.1.1.1 (NEW), [E] 607.2.1.1.2 (NEW), IPC Chapter 14, IRC P2905 (NEW), IRC P2905.1 (NEW)

Proponent: Gary Klein, Affiliated International Management, LLC Gary Klein (Gary@aim4sustainability.com)

THIS IS A 3 PART CODE CHANGE. PARTS I AND II WILL BE HEARD BY THE IECC RESIDENTIAL ENERGY CONSERVATION CODE DEVELOPMENT COMMITTEE AS 2 SEPARATE CODE CHANGES. PART III WILL BE HEARD BY THE IRC-PM COMMITTEE. SEE THE TENTATIVE HEARING ORDERS FOR THESE COMMITTEES.

PART I IECC-RESIDENTIAL PROVISIONS

Revise as follows:

R403.4.1 (IRC N1103.4.1) ~~Circulating~~ ~~hot~~ Heated water circulation and temperature maintenance systems (Mandatory~~).~~ ~~Circulating hot water systems shall be provided with an automatic or readily *accessible* manual switch that can turn off the hot-water circulating pump when the system is not in use.~~ Heated water circulation systems shall be in accordance with Section R403.4.1.1. Heat trace temperature maintenance systems shall be in accordance with Section R403.4.1.2. Automatic controls, temperature sensors and pumps shall be *accessible*. Manual controls shall be *readily accessible*.

> **R403.4.1.1 (IRC N1103.4.1.1) Circulation systems**. Heated water circulation systems shall be provided with a circulation pump. The system return pipe shall be a dedicated return pipe or a cold water supply pipe. Gravity and thermo-syphon circulation systems shall be prohibited. Circulation system pump controls shall be demand activated. The controls shall start the pump upon sensing the presence of a user of a fixture or appliance, receiving a signal from the action of an action of a user of a fixture or appliance or sensing the flow of heated water to a fixture or appliance. The controls shall limit the water temperature increase in the return water piping to not more than 10ºF (5.6 ºC) greater than the initial temperature of the water in the return piping and shall limit the return water temperature to 102ºF (38.9ºC).
>
> **R403.4.1.2 (IRC N1103.4.1.2) Heat trace systems.** Electric heat trace systems shall comply with IEEE 515.1. Controls for such systems shall be able to automatically adjust the energy input to the heat tracing to maintain the desired water temperature in the piping in accordance with the times when heated water is used in the occupancy.

Add new standards to Chapter 5 (IRC Chapter 44) as follows:

The Institute of Electrical and Electronic Engineers, Inc.
3 Park Avenue
New York, NY 1016-5997

IEEE

515.1-2012 IEEE Standard for the Testing, Design, Installation, and Maintenance of Electrical Resistance Trace Heating for Commercial Applications

PART II-IPC

Revise as follows:

[E] 607.2.1 ~~Hot~~ Heated water circulation and temperature maintenance systems ~~controls~~. For other than Group R2, R3 and R4 occupancies that are 3 stories or less in height above grade plane, automatic circulating hot water system pumps or heat trace shall be arranged to be conveniently turned off, automatically or manually, when the hot water system is not in operation. Heated water circulation and temperature maintenance systems for Group R2, R3 and R4 occupancies that are 3 stories or less in height above grade plane shall be in accordance with Section 607.2.1.1.

[E] 607.2.1.1 Group R2, R3 and R4 occupancies 3 stories or less. This section shall apply to Group R2, R3 and R4 occupancies that are 3 stories or less in height above grade plane. Heated water circulation systems shall be in accordance with Section 607.2.1.1.1. Heat trace temperature maintenance systems shall be in accordance with Section 607.2.1.1.2. *Access* to automatic controls, temperature sensors and pumps shall be provided. *Ready access* to manual controls shall be provided.

[E] 607.2.1.1.1 Circulation systems. Heated water circulation systems shall be provided with a circulation pump. The system return pipe shall be a dedicated return pipe or a cold water supply pipe. Gravity and thermo-syphon circulation systems shall be prohibited. Circulation system pump controls shall be demand activated. The controls shall start the pump upon sensing the presence of a user of a fixture or appliance, receiving a signal from the action of an action of a user of a fixture or appliance or sensing the flow of heated water to a fixture or appliance. The controls shall limit the water temperature increase in the return water piping to not more than 10ºF (5.6 ºC) greater than the initial temperature of the water in the return piping and shall limit the return water temperature to 102ºF (38.9ºC).

[E] 607.2.1.1.2 Heat trace systems. Electric heat trace systems shall comply with IEEE 515.1. Controls for such systems shall be able to automatically adjust the energy input to the heat tracing to maintain the desired water temperature in the piping in accordance with the times when heated water is used in the occupancy.

Add standards to Chapter 14 as follows:

The Institute of Electrical and Electronic Engineers, Inc.
3 Park Avenue
New York, NY 1016-5997

IEEE

515.1-2012 IEEE Standard for the Testing, Design, Installation, and Maintenance of Electrical Resistance Trace Heating for Commercial Applications

PART III-IRC

Add new text as follows:

SECTION P2905
HEATED WATER DISTRIBUTION SYSTEMS

P2905.1 Heated water systems. Heated water circulation and temperature maintenance systems shall be in accordance with Section N1103.4.1.

Reason: There are 2 primary reasons for this proposed change. 1) Correlate the language in the IECC, the IRC and the IPC; 2) Clarify the requirements for heated water circulation systems and for heat trace systems, if they are installed. The proposed changes do not require the use of circulation or heat trace.

The current code language is not the same in the IECC and the IPC. It should be. It should also be the same in the IRC since the heated water systems do not know what occupancy they are in.

The current language allows for continuously operating circulation pumps, which creates inefficiency in the hot water distribution system. It also does not address the use of heat trace in both codes and there is currently no requirement that the heat trace be suitable for the application. The consequence is that water heating energy consumption is increased.

Figure 1 shows that demand activated circulation is significantly more energy efficient than any other type of heated water circulation system. The annual energy needed to keep the loop hot with water heated electrically or with natural gas are shown separately from the energy needed for the pump. The majority of the energy is lost in keeping the water in the loop at the desired temperature (all of it if there is a gravity loop). A small loop, 100 feet including the supply and the return was analyzed. The savings ranges from 87.5 percent when compared to a recirculation system that runs only 2-hours per day to 99 percent when compared to a recirculation system that runs only 24-hours per day. The operating costs and savings remain proportional as the length of the circulation loop and the flow rate of the pump increase.

Figure 1 Annual Energy Requirements for Demand Activated Circulation and Standard Recirculation

	Standard Recirculation						**Demand Activated Circulation**
	Daily Hours of Operation						
	24	12	8	6	4	2	0.25
Loop Heat Losses							
Natural Gas (therms)	292	146	97	73	49	24	3
Electric (kWh)	6,388	3,194	2,129	1,597	1,065	532	67
Pump Energy (kWh)	438	219	146	110	73	37	8

Figure 2 shows the differences in run-time at the water heater (or boiler) between a continuously pumped recirculation loop and one that has a demand activated pump control. Blank space (white) means the water heater was off. Red means some percent of run-time between zero and continuous. Pink means the water heater or boiler was running continuously. The test results come from studies done by Southern California Gas Company on a sample of more than 300 multi-family buildings with central water heaters and recirculation systems. Most systems tested were built before insulation was required on hot water recirculation loops. Savings ranged from 10-30 percent of the water heating energy use and 84 percent of the pump electricity use. The costs for installing the retrofit were paid back in just about one year. In new construction, the marginal costs would be recovered in just a few months

Figure 2 Run-time of Water Heater with Two Different Pump Controls

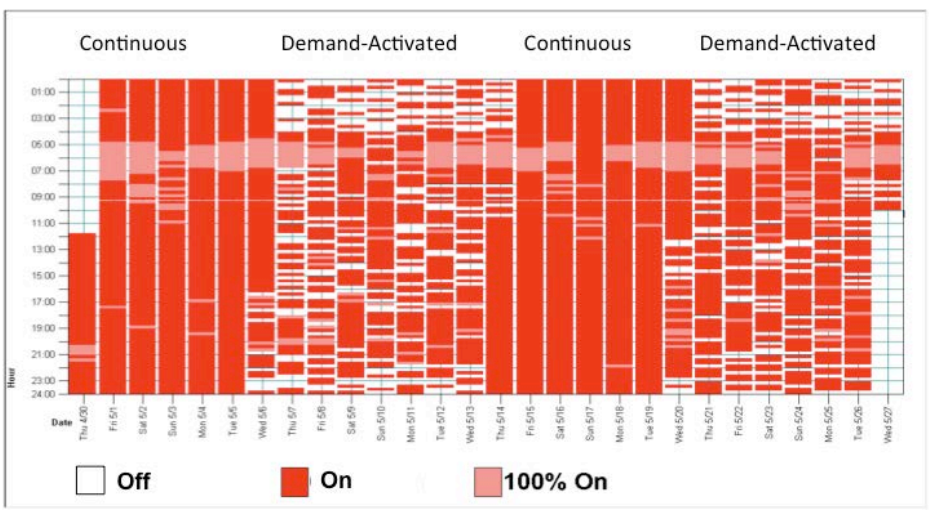

Why is demand-activated circulation such an efficient strategy? The 2012 IECC, IPC and IRC require that the hot water piping in automatic temperature maintenance systems in new buildings be insulated with pipe insulation. This means the water in the circulation loop will stay hot for a very long time – up to 45 minutes for ¾ inch nominal pipe up to 2 hours for 2-inch nominal pipe – even if the circulating pump is shut off. If this is the case, why run the pump when the water is still hot? Why run the pump when no one is in the building or when no one is demanding hot water? The only time it makes sense to run the pump is shortly before hot water is needed: hence the requirement that the pump be controlled on-demand.

The requirements for heat trace are partly to ensure that the systems can be operated in the most energy efficient manner consistent with providing heated water to the occupancy. The reference standards are included to ensure that installed systems are safe for the intended application. The energy consequences of using heat trace are very reasonable. Figure 3 presents the energy requirements for a heat trace system with the same hot water supply piping as the circulation systems shown in Figure 1. The energy requirements of keeping the trunk line hot – the same as keeping the supply portion of the loop hot in a circulating system – are 701 kWh per year, assuming 12 hours at high temp (115F) and 12 hours at economy temp (105F). This is equivalent to

operating the loop about 3 hours per day, but with hot water available 24/7 in the supply trunk! This is a significant savings when water heating is done electrically or with a similarly expensive fuel. If the branches are also traced, we can deliver heated water even more quickly to the fixtures using only 1,682 kWh per year, which is the same energy as running the loop a little more than 6 hours a day.

Figure 3. Annual Energy Needed for Electric Heat Trace Systems

Heat Trace			
	(kWh per year)		
	Trunk	**Br**	**T-Br**
Supply Heat Losses			
High Temp	394	552	946
Economy Temp	307	429	736
Total Electricity	701	981	1,682

Cost impact: The proposal does not require either circulation or heat trace; however if either is selected, it clarifies the requirements for installation. Most recirculation systems today are installed with some form of control, usually a timer, a bandwidth thermostat (aquastat) or both. Some come with more sophisticated controls, such as programmable or are connected to an energy management system. In some cases, switching from these control strategies to demand activated controls will cost less. In other cases, the demand-activated controls will cost more.

Analysis: A review of the standards proposed for inclusion in the code, UL 515 and CSA 22.2 No 130-03 with regard to the ICC criteria for referenced standards (Section 3.6 of CP#28) will be posted on the ICC website on or before April 1, 2013.

RE125-13
PART I IECC-RESIDENTIAL PROVISIONS

Public Hearing: Committee: AS AM D
Assembly: ASF AMF DF

PART II IPC

Public Hearing: Committee: AS AM D
Assembly: ASF AMF DF

PART III IRC-P

Public Hearing: Committee: AS AM D
Assembly: ASF AMF DF

R403.4.1 #2-EC-KLEIN

RE126-13
R403.4.1 (IRC N1103.4.1)

Proponent: Eric Makela / Britt/Makela Group, Inc. representing Northwest Energy Codes Group (Eric@BrittMakela.com)

Revise as follows:

R403.4.1 (N1103.4.1) Circulating hot water systems (Mandatory). Circulating hot water systems shall be ~~provided with an automatic or readily *accessible* manual switch that can turn off the hot-water circulating pump when the system is not in use~~ equipped with a control system that controls the recirculation pump operation based on measurement of hot water demand and hot water return temperature.

Reason: The IECC has allowed the use of either manual or automatic controls for turning circulating pumps on and off for hot water recirculating systems. If manual controls are installed, the homeowner is responsible for turning the system on and off when needed. If not turned off, the pump will continue to circulate 120° to 140 ^{o}F water through piping leading to pipe heat loss and also requiring the water heater to run longer to continue to bring the water up to temperature. Installing a time clock on the circulation pump is more dependable if set properly, but still can lead to losses in the piping and additional run time for the water heater with no benefit to the home owner if set to run when the occupants are not in the house. In addition to piping and water heating energy use, electricity to run the pump can also cost a few hundred dollars per year. Constant recirculation of hot water can also degrade piping. A study conducted by the California Energy Commission's Public Interest Energy Research demonstrated that hot water distribution systems lose significant amounts of energy. This is significant considering that water heating uses 31% of energy in a typical house.

Demand control is the best automatic control option and superior to both manual off and time clock controls. The design features will prevent the pump motor burning out due to an air pocket, which is a common failure. The demand controlled recirculation system matches the user's demand to the delivery of hot water. The user gets the hot water quickly when they want it. On demand pumps for water heating systems can potentially save $2 billion dollars a year in existing single family homes and $100 million in new construction. There is more potential for multi-family buildings. On demand systems prevent energy waste and mean less maintenance and repair costs over a standard recirculation system because the pump is only on when the occupant requires hot water.

This proposal will increase energy and water savings over a water heater circulation system with manual or automatic controls.

Cost Impact: The code change proposal will increase the cost of construction.

RE126-13

Public Hearing:	Committee:	AS	AM	D
	Assembly:	ASF	AMF	DF

R403.4.1-EC-MAKLEA.DOC

RE127-13

R403.4.2 (IRC N1103.4.2), IPC [E]607.5, IRC P2905 (New), IRC P2905.1 (New)

THIS IS A 3 PART CODE CHANGE. PARTS I AND II WILL BE HEARD BY THE IECC-RESIDENTIAL ENERGY CONSERVATION CODE DEVELOPMENT COMMITTEE AS 2 SEPARATE CODE CHANGES. PART III WILL BE HEARD BY THE IRC-PM COMMITTEE. SEE THE TENTATIVE HEARING ORDERS FOR THESE COMMITTEES.

Proponent: Craig Conner, representing self (craig.conner@mac.com),
Gary Klein, Affiliated International Management, LLC (gary@aim4sustainability.com)

PART I IECC-RESIDENTIAL PROVISIONS

Revise as follows:

R403.4.2 (IRC N1103.4.2) ~~Hot~~ Heated water pip~~e~~ing insulation (Prescriptive). ~~Insulation for hot water pipe with a minimum thermal resistance (*R* value) of R-3 shall be applied to the following:~~ The following piping conveying water heated by a water heater shall have ~~be externally insulated with~~ insulation with ~~having~~ a thermal resistance (*R-value*) of not less than R-3. Pipe insulation shall be continuous except where piping passes through a framing member. Piping that is heat traced shall be insulated in accordance with the heat trace manufacturer's recommendations.

1. Piping larger than 3/4 inch (19 mm) nominal diameter.
2. Piping serving more than one dwelling unit.
3. Piping from the water heater to kitchen outlets.
4. Piping located outside the conditioned space.
~~5. Piping from the water heater to a distribution manifold.~~
~~6.~~ 5. Piping located in or under a ~~floor~~ concrete slab.
~~7.~~ 6. Piping that is buried in ~~piping~~ the earth.
~~8.~~ 7. Supply and return piping in a heated water recirculation system~~s~~
8. Supply piping in ~~other than~~ a demand recirculation system.
~~9. Piping with run lengths greater than the maximum run lengths for the nominal pipe diameter given in Table 403.4.2.~~

~~All remaining piping shall be insulated to at least R-3 or meet the run length requirements of Table 403.4.2.~~

~~**TABLE R403.4.2**~~
~~**MAXIMUM RUN LENGTH (feet)[a]**~~

~~**Nominal Pipe Diameter of Largest Diameter Pipe in the Run (inch)**~~	~~**3/8**~~	~~**1/2**~~	~~**¾**~~	~~**>3/4**~~
~~**Maximum Run Length**~~	~~30~~	~~20~~	~~10~~	~~5~~

~~For SI: 1 inch=25.4 mm, 1 foot = 304.8 mm~~
~~a. Total length of all piping from the distribution manifold or the recirculation loop to a point of use.~~

PART II-IPC

Revise as follows:

[E] 607.5 Pipe insulation. Hot water piping in automatic temperature maintenance systems shall be insulated with 1 inch (25 mm) of insulation having a conductivity not exceeding 0.27 Btu per inch/h • ft2 • °F (1.53 W per 25 mm/m2 • K). The first 8 feet (2438 mm) of hot water piping from a *hot water* source that does not have heat traps shall be insulated with 0.5 inch (12.7 mm) of material having a conductivity not

exceeding 0.27 Btu per inch/h • ft2 • °F (1.53 W per 25 mm/m2 • K). This section does not apply to Group R2, R3 and R4 occupancies that are 3 stories or less in height above grade plane. Piping in those occupancies shall be insulated in accordance with Section R403.4.2 of the *International Energy Conservation Code*.

Part III – IRC-P

Add new text as follows:

SECTION P2905
HEATED WATER DISTRIBUTION SYSTEMS

P2905.1 Insulation of piping required. Piping conveying water heated by a water heater shall be externally insulated in accordance with Section N1103.4.2.

Reason:

PART I-IECC-RE
Several changes in terminology are included in this proposal. The phrase "water heated by a water heater" was used instead of "hot water" because the IECC does not have a definition for "hot water". The "hot water" definition found in the IRC and the IPC says water of a temperature 110F or greater. Therefore, the code would not clear about insulation requirements for any piping if the code user stated they intended to set the water heater temperature to 108F. The phrase "water heated by a water heater" clarifies the code.

Items 6, 7 and 8 in the list were clarified. The requirements were not changed.

The first 8 items listed above describe situations where there are more likely to be repeated flows of heated water within less than an hour, or where the piping is in a more harsh environment, such as outside; both cases where the insulation is of more value. In most other situations, there is extended time between hot water draws so that the pipe and the insulation is of limited value.

Item #5 concerning "distribution manifolds" is struck because it is difficult to define "distribution manifold", because the important piping is probably covered in other items, and because a "distribution manifold" on a line that is seldom used does not make sense to insulate.

Item 9 and the Table were deleted, as these applications of insulation are of limited value. When the supply pipes are located in room temperature air (65-70F), the largest value in pipe insulation comes when it allows heated water to be retained from one use to the next use in the pipes, as subsequent uses do not have to begin with the cooled off water in the pipes. The time spent waiting for hot water is the time it takes to empty the cool water in the pipe and move the hot water to the point of use. After use the water in that pipe cools down and another fill of the pipe with hot water is required for the next use. Pipe insulation saves energy where the pipe has multiple hot water draws within a period of 10 to 60 minutes. Pipe insulation also saves energy by reducing the temperature drop from the water heater to the fixtures; this is a couple of degrees in room temperature air; much more in more adverse environments. The line from the hot water supply to the kitchen is by far the most valuable to insulate due to the high likelihood of multiple hot-water draws in a short time period.

Removing item 9 and Table R403.2 eliminates the need to measure pipe lengths.

PART II – IPC
Normally, the IPC covers plumbing in commercial buildings. However, because the Residential Provisions of the IECC covers R2, R3 and R4 buildings that are 3 stories or less above grade, a 'pointer' in the IPC is added to alert the plumbing installer of Group R2, R3 and R4 piping insulation requirements. The installer then knows to allow sufficient space to accommodate the pipe insulation.

PART III – IRC
A new section is added in Chapter 29 of the IRC to alert the plumbing installer that the heated water piping installation includes insulating the piping system. The installer then knows to allow sufficient space to accommodate the insulation.

Cost Impact: The code change proposal will not increase the cost of construction.

RE127-13
PART I-IECC RESIDENTIAL PROVISIONS

Public Hearing:	Committee:	AS	AM	D
	Assembly:	ASF	AMF	DF

PART II-IPC

Public Hearing:	Committee:	AS	AM	D
	Assembly:	ASF	AMF	DF

PART III-IRC-P

Public Hearing:	Committee:	AS	AM	D
	Assembly:	ASF	AMF	DF

R403.4.2-EC-CONNER-KLEIN.DOC

RE128-13

R403.4.2 (IRC N1103.4.2), Table R403.4.2 (IRC Table N1103.4.2)

Proponent: Brian Dean, Energy Efficient Codes Coalition; Garrett Stone, Brickfield Burchette Ritts & Stone, PC; Jeff Harris, Alliance to Save Energy; Harry Misuriello, American Council for an Energy-Efficient Economy; and Bill Prindle, Energy Efficient Codes Coalition.

Revise as follows:

R403.4.2 (N1103.4.2) Hot water pipe insulation (Prescriptive). Insulation for hot water piping with a minimum
thermal resistance (*R*-value) of R-3 shall be applied to the following:

1. Piping larger than 3/4 inch nominal diameter.
2. Piping serving more than one dwelling unit.
3. Piping from the water heater to kitchen outlets.
4. Piping located outside the conditioned space.
5. Piping from the water heater to a distribution manifold.
6. Piping located under a floor slab.
7. Buried piping.
8. Supply and return piping in recirculation systems other than demand recirculation systems.
9. Piping with run lengths greater than the ~~maximum~~ run length~~s~~ limits for pipes without R-3 insulation for the nominal pipe diameter ~~given~~ in Table R403.4.2.

~~All remaining piping shall be insulated to at least R-3 or meet the run length requirements of Table R403.4.2.~~

TABLE R403.4.2 (N1103.4.2)
~~MAXIMUM~~ RUN LENGTH LIMITS FOR PIPING WITHOUT R-3 INSULATION ~~(feet)~~[a]

Nominal Pipe Diameter of Largest Diameter Pipe in the Run (inch)	3/8	1/2	3/4	~~> 3/4~~
~~Maximum~~ Run Length~~s~~ Limit (feet)	30	20	10	~~5~~

For SI: I inch = 25.4 mm, 1 foot = 304.8 mm
a. Total length of all piping from the distribution manifold or the recirculation loop to a point of use.

Reason: The purpose of this code change is to simplify and clarify the code and clear up potentially confusing language. The proposal does not change the stringency of the requirements. Specifically, the proposal:

- removes duplicative, confusing language from Section R403.4.2 and Table R403.4.2;
- clarifies the requirements for pipe in excess of ¾ inch in diameter, which are always required to be insulated and therefore there is no applicable limit on length; and
- eliminates the use of the word "maximum" related to pipe lengths in the table, which may be read to limit all pipe lengths, when the code provision is intended to only limit pipe lengths where the piping is not fully insulated to R-3.

Cost Impact: The code change proposal will not increase the cost of construction.

RE128-13

Public Hearing:	Committee:	AS	AM	D
	Assembly:	ASF	AMF	DF

R403.4.2-EC-DEAN-HARRIS-MISURIELLO-PRINDLE-STONE.DOC

RE129-13

R403.4.2 (IRC N1103.4.2), Table R403.4.2 (IRC Table N1103.4.2), IPC [E]607.5, IRC P2905 (NEW)

THIS IS A 3 PART CODE CHANGE PROPOSAL. PARTS I AND II WILL BE HEARD BY THE IECC-RESIDENTIAL ENERGY CONSERVATION CODE DEVELOPMENT COMMITTEE AS TWO SEPARATE PROPOSALS. PART III WILL BE HEARD BY THE IRC-MP COMMITTEE. SEE THE TENTATIVE HEARING ORDERS FOR THESE COMMITTEES.

Proponent: Gary Klein, Affiliated International Management, LLC, representing self, (gary@aim4sustainability.com)

PART I – IECC-RESIDENTIAL PROVISIONS

Revise as follows:

R403.4.2 (IRC N1103.4.2) ~~Hot~~ Heated water pipe insulation (Prescriptive). Piping conveying water heated by a water heater shall be insulated. The insulation shall have a thermal resistance (*R-value*) of not less than R-3 or where tubular pipe insulation is used for insulating piping, the thermal conductivity, k, of such insulation shall be not greater than 0.28 Btu per inch/h●ft^2 ● F [0.40 W/(m●K)] for water temperatures less than or equal to 140°F (60°C) and not greater than 0.29 Btu per inch/h●ft^2 ● F [0.42 W/(m●K)] for water temperatures greater than 140°F (60°C) and less than or equal to 200°F (93.3°C). Tubular pipe insulation shall be installed in accordance with the insulation manufacturer's instructions. Pipe insulation shall be continuous except where the piping passes through a framing member. The minimum insulation thickness requirements of this section shall not supersede any greater insulation thickness requirements necessary for the protection of piping from freezing temperatures or the protection of personnel against external surface temperatures on the insulation. ~~Insulation for hot water pipe with a minimum thermal resistance (*R*-value) of R-3 shall be applied to the following:~~

~~1. Piping larger than 3/4 inch (19 mm) nominal diameter.~~
~~2. Piping serving more than one dwelling unit.~~
~~3. Piping from the water heater to for kitchen outlets.~~
~~4. Piping located outside the conditioned space.~~
~~5. Piping from the water heater to a distribution manifold.~~
~~6. Piping located under a floor slab.~~
~~7. Buried in piping.~~
~~8. Supply and return piping in recirculation systems other than demand recirculation systems.~~
~~9. Piping with run lengths greater than the maximum run lengths for the nominal pipe diameter given in Table 403.4.2.~~

~~All remaining piping shall be insulated to at least R-3 or meet the run length requirements of Table 403.4.2.~~

~~**TABLE R403.4.2 (N1103.4.2)**~~
~~**MAXIMUM RUN LENGTH (feet)**[a]~~

~~**Nominal Pipe Diameter of Largest Diameter Pipe in the Run (inch)**~~	~~**3/8**~~	~~**1/2**~~	~~**3/4**~~	~~**>3/4**~~
~~**Maximum Run Length**~~	~~30~~	~~20~~	~~10~~	~~5~~

~~For SI: 1 inch=25.4 mm, 1 foot = 304.8 mm~~
~~a. Total length of all piping from the distribution manifold or the recirculation loop to a point of use.~~

Exceptions: Insulation shall not be required to be installed on the following:

1. Flexible connectors or reduced sized fixture supply tubing from the connection at the end of the fixture supply piping to a fixture fitting.
2. Valves, pumps and threaded unions in heated water piping.
3. Piping from shower and bath mixing valves to the water outlets.
4. Cold water piping that receives heated water as part of a water recirculation system that does not have a dedicated return pipe to the water heater.
5. Tubing from hot drinking-water heating units to the water outlet.
6. Piping at locations where a vertical support of the piping is installed.
7. Piping or tubing from a tankless water heater serving only one fixture.

TABLE R403.4.2 (N1103.4.2)
TUBULAR INSULATION WALL THICKNESS

NOMINAL PIPE OR TUBE DIAMETER (inches)	MINIMUM INSULATION WALL THICKNESS (inches)	
	≤140 °F WATER TEMPERATURE	>140 °F to 200°F WATER TEMPERATURE
≤3/8	3/8	3/8
> 3/8 to <3/4	1/2	1/2
> 3/4 to <1	3/4	1
≥1 to <1 1/2	1	1 1/2
≥1 ½ to <4	1 1/2	2
≥4 to <8	1 1/2	2
≥8	1 1/2	2

For SI: 1 inch = 25.4 mm; °C = [(°F – 32)]/1.8

PART II-IPC

Revise as follows:

[E] 607.5 ~~Pipe~~ Insulation of piping. ~~Hot water piping in automatic temperature maintenance systems shall be insulated with not less than 1 inch (25 mm) of insulation having a conductivity not exceeding 0.27 Btu per inch/h ● ft^2 ● °F (1.53 W per 25 mm/m^2 ● K). The first 8 feet (2438 mm) of hot water piping from a hot water-source that does not have heat traps shall be insulated with 0.5 inch (12.7 mm) of material having a conductivity not exceeding 0.27 Btu per inch/h ● ft^2 ● °F (1.53 W per 25 mm/m^2 ● K).~~ For other than Group R2, R3 and R4 occupancies that are 3 stories or less in height above grade plane, piping to the inlet of a water heater and piping conveying water heated by a water heater shall be insulated in accordance with Sections C404.5 of the *International Energy Conservation Code*. For Group R2, R3 and R4 occupancies that are 3 stories or less in height above grade plane, piping to the inlet of a water heater and piping conveying water heated by a water heater shall be insulated in accordance with Section R403.4.2 of the *International Energy Conservation Code*.

PART III – IRC-P

Add new text as follows:

SECTION P2905
HEATED WATER DISTRIBUTION SYSTEMS

P2905.1 Insulation of piping required. Piping conveying water heated by a water heater shall be insulated in accordance with Section N1103.4.2.

Reason: PART I-IECC The current requirements as to where pipe insulation must be installed and the run length allowance where insulation *doesn't* have to be installed, are much too complex for most installers to comprehend. Think of trying to explain the current run length allowance to the typical person that ends up performing this type of work. It also requires too much thinking on the part the inspector when the inspector is facing a plumbing system that has some hot water piping insulated and some not. The insulation requirement needs to be simple – just insulate all of the hot water piping. The minor amount of savings by not insulating

some lengths of hot water piping is overshadowed by confusion/time wasted in the field and the significant potential of not getting it correct (and failing an inspection).

The phrase “water heated by a water heater” was used instead of “hot water” because the IECC does not have a definition for hot water. Code users could refer to the definition found in the IRC and the IPC for hot water which says water of a temperature 110F or greater. However, an installer *could* try to justify not installing insulation on any piping with the claim that they intended to set the water heater temperature at 108F. This is not the intent of the existing language and by using the phrase “water heated by a water heater”, this loophole will be closed.

The description of the required insulation is expanded. Where tubular pipe insulation is used, that material does not have an R value rating. The equivalent R value must be calculated. And while some submittal specification sheets show the equivalent R-value for each wall thickness, some do not. And how often does a submittal sheet show up on a jobsite? Tubular pipe insulation is specified in wall thickness and k value. The k value in this code section covers the most commonly used insulation materials for this application. To keep it simple – Table R403.4.2 is provided to show the required wall thicknesses that closely approximates a R value of R-3 for the two most common types of pipe insulation materials. This takes the calculations out of the picture to make it simple for installers and inspectors.

The option for insulating piping with materials that are R-value rated was left in this section because it is sometimes possible to “encapsulate” piping within wall or ceiling insulation without the need for installing tubular pipe insulation. Where piping is properly “nested” into fiberglass batts in walls or is covered with spray-in foam systems, the installation of tubular pipe insulation is a waste of time and money. This option needs to remain to allow these alternate cost savings methods to be used.

The last sentence “Pipe insulation shall be continuous along all piping.” is intended to prohibit a common practice of just insulating piping up to where the piping enters and exits a structural member. For example, a pipe that runs vertically through the bottom plate of a wall or through a joist needs to be insulated continuously through those members in order for the insulated piping system to be effective in reducing energy loss.

The exceptions are added to this section to clarify where “piping insulation” is not required. Most items are common sense. Valves and pumps are difficult to insulate and the benefit of such effort is minimal. Let’s keep is simple and easy.

PART II– IPC

The text that is struck out in IPC 607.5 is replaced with text that points the appropriate sections on the IECC that cover insulation.

Normally, the IPC only covers plumbing in commercial buildings. However, because the residential chapters in the IECC covers R2, R3 and R4 occupancy buildings that are 3 stories or less above grade plane in height *and* these occupancies are not covered by the plumbing chapter in the IRC, there needs to be a ‘pointer section’ in the IPC to alert the plumbing installer that there are piping insulation requirements in the residential provisions of the IECC that apply. Of primary concern are for allowing sufficient space around the piping (such as in wall cavities) and properly sizing holes through structural members to accommodate the insulation.

PART III – IRC

A new section is added in Chapter 29 of the IRC to alert the plumbing installer that the heated water piping installation must allow for insulating of the piping system. Of primary concern are for allowing sufficient space around the piping (such as in wall cavities) and properly sizing holes through structural members to accommodate the insulation.

Cost Impact: None.

RE129-13
PART I-IECC-RESIDENTIAL PROVISIONS

Public Hearing:	Committee:	AS	AM	D
	Assembly:	ASF	AMF	DF

PART II-IPC

Public Hearing:	Committee:	AS	AM	D
	Assembly:	ASF	AMF	DF

PART III-IRC-P

Public Hearing:	Committee:	AS	AM	D
	Assembly:	ASF	AMF	DF

R403.4.2-EC-KLEIN

RE130-13
R403.4.2 (IRC N1103.4.2)

Proponent: Edward R. Osann, Natural Resources Defense Council, on behalf of self (eosann@nrdc.org)

Revise as follows:

R403.4.2 (N1103.4.2) Hot water pipe insulation (Prescriptive). Insulation for hot water pipe with a minimum thermal resistance (*R*-value) of R-3 shall be applied to the following:

1. Piping larger than $^3/_4$ inch nominal diameter.
2. Piping serving more than one dwelling unit.
3. Piping from the water heater to kitchen outlets.
4. In occupancies with three or more bedrooms, piping from the water heater or recirculation system piping to the outlet for any shower or tub/shower combination.

~~4~~5. Piping located outside the conditioned space.
~~5~~6. Piping from the water heater to a distribution manifold.
~~6~~7. Piping located under a floor slab.
~~7~~8. Buried piping.
~~8~~9. Supply and return piping in recirculation systems other than demand recirculation systems.
~~9~~10. Piping with run lengths greater than the maximum run lengths for the nominal pipe diameter given in Table R403.4.2.

All remaining piping shall be insulated to at least R-3 or meet the run length requirements of Table R403.4.2.

Reason: Every adult in the United States has experienced the waiting time for water that is hot enough to step into the shower. Most do so on a regular basis, and often for a minute or more. While cold or tepid water in the initial draw from a hot water outlet serving a clothes washer, dishwasher, or lavatory sink may be usable for its intended purpose, cold or tepid water for showering is routinely purged, a waste of water, energy, and time. Pipe insulation significantly reduces heat loss and helps to ensure that hot water gets to the shower sooner. During showering, pipe insulation keeps the water hotter by reducing the temperature drop from the source of hot water to the shower outlet. This saves significant energy by making it possible to reduce the set point for the storage temperature at the hot water heater. Every 1°F reduction in hot water storage temperature reduces standby heat losses by almost 2%. During the cool-down phase, pipe insulation increases the time it takes for the temperature of the water to cool down, roughly doubling the cool-down time for ½ inch nominal pipe and tripling it for ¾ inch nominal pipe. This saves energy, water, and time for all those hot water events, including showers, that are clustered between 10 and 45 minutes apart, as when occupants are getting ready for work and school in the AM.

Cost Impact: This code change proposal will increase the cost of construction only to the extent that all or a portion of the pipe run to a shower would not already require insulation under the existing requirements of Section R403.4.2. For example, under the current language of this section, hot water pipe running in an unconditioned crawl space or attic is required to be insulated. Pipe running from a water heater to a distribution manifold is also required to be insulated, while up to 20 feet of ½ inch supply piping from a manifold to an end use such as a shower may be uninsulated. At an estimated cost of materials, labor, and profit of $1.10 to $1.50 per linear foot for installing foam insulation[1], the cost of insulating 20 feet of ½ inch supply piping would be $22 to $30.
Klein, Gary, "Cost Estimation for Materials and Installation of Hot Water Piping Insulation," prepared for Pacific Northwest National Laboratory, June 2012, accessible at <http://bc3.pnnl.gov/wiki/index.php/Downloads>.

RE130-13

Public Hearing:	Committee:	AS	AM	D
	Assembly:	ASF	AMF	DF

R403.4.2-EC-OSANN.DOC

RE131-13
R403.4.2 (IRC N1103.4.2)

Proponent: Edward R. Osann, on behalf of Natural Resources Defense Council; Ryan Meres, on behalf of Institute for Market Transformation.(eosann@nrdc.org)

Revise as follows:

R403.4.2 (N1103.4.2) Hot water pipe insulation (~~Prescriptive~~ Mandatory). Insulation for hot water pipe with a minimum thermal resistance (*R*-value) of R-3 shall be applied to the following:

1. Piping larger than $^3/_4$ inch nominal diameter.
2. Piping serving more than one dwelling unit.
3. Piping from the water heater to kitchen outlets.
4. Piping located outside the conditioned space.
5. Piping from the water heater to a distribution manifold.
6. Piping located under a floor slab.
7. Buried piping.
8. Supply and return piping in recirculation systems other than demand recirculation systems.
9. Piping with run lengths greater than the maximum run lengths for the nominal pipe diameter given in Table R403.4.2.

All remaining piping shall be insulated to at least R-3 or meet the run length requirements of Table R403.4.2.

Reason: The 2012 edition of the IECC added this prescriptive section on hot water pipe insulation, containing a list of 9 factors or locations that require pipe to be insulated to R-3. However, because it is prescriptive and not mandatory, it is not required in any project that opts for the performance approach. Unfortunately, while the 2012 IECC performance approach allows credit for improving the efficiency of the hot water heat source, no credit is available for features of the hot water distribution system that might actually reduce the amount of hot water used, such as those listed in R403.4.2. (The HERS rating system is similarly drawn, offering no credit for hot water pipe insulation.) Thus, although hot water pipe insulation is known to save significant amounts of energy over the life of the building, the energy savings cannot be "scored" or accumulated within the performance framework of the code. Section R403.4.2 cannot contribute to compliance under the IECC performance approach, and is thus likely to be ignored. For these energy savings to be realized in all new residential buildings covered by the IECC, R403.4.2 should be mandatory instead of prescriptive. If and when Section R405 is modified to ensure that the performance path will account for the energy attributes of the hot water distribution system, consideration can be given to removing the mandatory designation from some or all portions of R403.4.2.

As was noted by the original proponents of Section R403.4.2, insulation of hot water piping reduces the waste of energy, water, and time during the delivery, use, and cool-down phases of a hot water event. During the delivery phase, when the piping runs in unconditioned spaces, in a slab, when it is buried or when the flow rate is very low (less than 1 gpm), pipe insulation significantly reduces the heat loss and helps to ensure that hot enough water gets to the outlets. During the cool-down phase, pipe insulation increases the time it takes for the temperature of the water to cool down, roughly doubling the cool-down time for ½ inch nominal pipe and tripling it for ¾ inch nominal pipe. This saves energy, water and time for all those hot water events that are clustered between 10 and 45 minutes apart, as when occupants are getting ready for work and school in the morning and during evening activities such as preparing and cleaning up from supper and getting ready for bed, as well as lunchtime when people are home during the day.

As hot water is being used, pipe insulation keeps the water hotter by reducing the temperature drop from the source of hot water to the outlet. This saves additional energy by making it possible to reduce the set point for storage temperature at the hot water heater. Every 1°F reduction in hot water storage temperature reduces standby heat losses by almost 2%.

Cost Impact: This code change proposal will not increase the cost of construction for builders following the prescriptive approach, i.e., the majority of all builders. For those following the performance path, pipe insulation will be an added cost. A recent estimate[1] of the cost of insulating hot water piping with R-3 foam insulation is $1.10 to $1.50 per linear foot, including labor, materials, and profit for the plumbing subcontractor. The cost of insulating all hot water piping in a 2400 ft^2 home was estimated by the same study to be $135 to $325, depending on building configuration. It should be noted that these estimates are based on insulation of *all* hot water piping in the home, which is more than is required by Section R403.4.2. Thus the actual impact on the cost of construction should be somewhat less than this range in most cases.

[1]Klein, Gary, "Cost Estimation for Materials and Installation of Hot Water Piping Insulation," prepared for Pacific Northwest National Laboratory, June 2012, accessible at <http://bc3.pnnl.gov/wiki/index.php/Downloads>.

RE131-13

Public Hearing:	Committee:	AS	AM	D
	Assembly:	ASF	AMF	DF

R403.4.2-EC-OSANN.DOC

RE132-13

R403.4.2 (IRC N1103.4.2), Table R403.4.2 (IRC Table N1103.4.2)

Proponent: Don Surrena, CBO, National Association of Home Builders (NAHB) (dsurrena@nahb.org)

Revise as follows:

R403.4.2 (N1103.4.2) Hot water pipe insulation (Prescriptive). Insulation for hot water pipe with a minimum thermal resistance (*R*-value) of R-3 shall be applied to the following:

1. Piping larger than 3/4 inch nominal diameter.
2. Piping serving more than one dwelling unit.
~~3. Piping from the water heater to kitchen outlets.~~
~~4~~3. Piping located outside the conditioned space.
~~5~~4. Piping from the water heater to a distribution manifold.
~~6~~5. Piping located under a floor slab.
~~7~~6. Buried piping.
~~8~~7. Supply and return piping in recirculation systems other than demand recirculation systems.
~~9. Piping with run lengths greater than the maximum run lengths for the nominal pipe diameter given in Table R403.4.2.~~

~~All remaining piping shall be insulated to at least R-3 or meet the run length requirements of Table R403.4.2.~~

~~**TABLE R403.4.2 (N1103.4.2)**~~
~~**MAXIMUM RUN LENGTH (feet)[a]** –~~

~~Nominal Pipe Diameter of Largest Diameter Pipe in the Run (inch)~~	~~3/8~~	~~1/2~~	~~3/4~~	~~> 3/4~~
~~Maximum Run Length~~	~~30~~	~~20~~	~~10~~	~~5~~

Reason: Research has been performed by a two different sources that indicate insulating hot water piping in a residential home is not cost effective. The NAHB Research Center performed a study in 2010 that concluded, based on a low cost estimate that the simple payback for insulating hot water piping was in the 60 to 100 year range based on the piping material. Additionally, a 2009 study presented by the National Renewable Energy Lab at the ASME 3rd International Conference of Energy Sustainability estimated paybacks between 72 and 183 years for various insulation configurations.

First cost, as determined in the NAHB Research Center report varied between $500 and $1,200. The NREL report had a slightly smaller house with an estimated installation cost of $366.

The simulations demonstrate that the benefit of insulation is greatest when all of the hot water uses are spaced apart from 10 to 30 minutes; however, this is not typically how hot water is consumed in a home. The benefit of insulation is diminished with shorter and longer time between uses.

It was shown in the study that pipes located in colder locations such as an unconditioned crawl space, benefit more from pipe insulation than pipes located in more conditioned spaces. This is why the insulation requirement was not changed for hot water pipes outside conditioned space.

Plastic pipe was shown to have less loss than copper pipe and commensurately insulation is more beneficial on metal pipe than on plastic pipe. However, copper pipe is losing market share and currently is only being installed in 14% of new homes.

Sources:

NAHB Research Center (2010), *Domestic Hot Water System Piping Insulation: Analysis of Benefits and Cost*
Hendron, R. Burch, J. Hoeschele, M. Rainer, L. (2009), *Potential for Energy Savings Through Residential Hot Water Distribution System Improvements*, Proceedings of the 3rd International Conference on Energy Sustainability

Cost Impact: The code change proposal will not increase the cost of construction.

RE132-13

Public Hearing:	Committee:	AS	AM	D
	Assembly:	ASF	AMF	DF

R403.4.2-EC-SURRENA.DOC

RE133-13
R403.4.2 (IRC N1103.4.2)

Proponent: Jeremiah Williams, U.S. Department of Energy (jeremiah.williams@ee.doe.gov)

Revise as follows:

R403.4.2 (N1103.4.2) Hot water pipe insulation (Prescriptive). Insulation for hot water pipe with a minimum thermal resistance (*R*-value) of R-3 shall be applied to the following:

1. ~~Piping larger than 3/4 inch nominal diameter.~~
~~2.~~ 1. Piping serving more than one dwelling unit.
~~3.~~ 2. Piping from the water heater to kitchen outlets.
~~4.~~ 3. Piping located outside the conditioned space.
~~5.~~ 4. Piping from the water heater to a distribution manifold.
~~6.~~ 5. Piping located under a floor slab.
~~7.~~ 6. Buried piping.
~~8.~~ 7. Supply and return piping in recirculation systems other than demand recirculation systems.
~~9.~~ 8. Piping with run lengths greater than the maximum run lengths for the nominal pipe diameter given in Table R403.4.2.

All remaining piping shall be insulated to at least R-3 or meet the run length requirements of Table R403.4.2.

Reason: Insulation requirements for ¾-in piping are currently inconsistent between the list in Section R403.4.2 and Table R403.4.2. Eliminating the list item eliminates the ambiguity.

Cost Impact: The code change proposal will not increase the cost of construction.

RE13313

Public Hearing:	Committee:	AS	AM	D
	Assembly:	ASF	AMF	DF

R403.4.2-EC-WILLIAMS.DOC

RE134-13
Table R403.4.2 (IRC Table N1103.4.2)

Proponent: Edward R. Osann, Natural Resources Defense Council, on behalf of self. (eosann@nrdc.org)

Revise as follows:

TABLE R403.4.2 (N1103.4.2)
MAXIMUM RUN LENGTH (feet)[a]

Nominal Pipe Diameter of Largest Diameter Pipe in the Run (inch)	$^{3}/_{8}$	$^{1}/_{2}$	$^{5}/_{8}$	$^{3}/_{4}$	> $^{3}/_{4}$
Maximum Run Length	30	20	15	10	5

For SI: 1 inch = 25.4 mm, 1 foot 304.8 mm.

a. Total length of all piping from the distribution manifold or the recirculation loop to a point of use.

Reason: This proposal adds ⅝ inch pipe to Table R403.4.2 to encourage plumbing system designers and installers to consider opportunities to use ⅝ inch pipe in hot water applications where the capacity provided by $^{1}/_{2}$ inch pipe is inadequate but $^{3}/_{4}$ inch pipe may not be necessary. The maximum uninsulated run length proposed is proportional to the length limits currently in the table for $^{1}/_{2}$ inch and $^{3}/_{4}$ inch pipe. Where system configurations allow ⅝ inch pipe to be used in lieu of ¾ inch pipe, both energy and water will be saved by reducing the volume of water standing in the pipe subject to cool-down between draws.

Cost Impact: This code change proposal provides a design option and will not increase the cost of construction.

RE134-13

Public Hearing:	Committee:	AS	AM	D
	Assembly:	ASF	AMF	DF

R403.4.2T #1-EC-OSANN.DOC

RE135-13
Table R403.4.2 (IRC Table N1103.4.2)

Proponent: Edward R. Osann, Natural Resources Defense Council, on behalf of self. (eosann@nrdc.org)

Revise as follows:

TABLE R403.4.2 (N1103.4.2)
MAXIMUM RUN LENGTH (feet)[a]

Nominal Pipe Diameter of Largest Diameter Pipe in the Run (inch)	$^3/_8$	$^1/_2$	$^3/_4$	~~>3/4~~
Maximum Run Length	30	20	10	~~5~~

For SI: 1 inch = 25.4 mm, 1 foot 304.8 mm.

a. Total length of all piping from the distribution manifold or the recirculation loop to a point of use.

Reason: Section R403.4.2 is intended to save energy, water, and time for future occupants by requiring domestic hot water piping to be insulated where savings are likely to be greatest. The text of Section R403.4.2 currently provides that *all* hot water piping larger than ¾ inch diameter must be insulated:

> "Insulation for hot water pipe with a minimum thermal resistance (*R*-value) of R-3 shall be applied to the following:
> 1. Piping larger than $^3/_4$ inch nominal diameter.
>
> * * * * *
>
> 9. Piping with run lengths greater than the maximum run lengths for the nominal pipe diameter given in Table R403.4.2.
>
> All remaining piping shall be insulated to at least R-3 or meet the run length requirements of Table R403.4.2."

Table R403.4.2 is intended to identify lengths of pipe of various nominal diameters that may remain uninsulated when running from a distribution manifold or recirculation loop to a point of use. Although Table R403.4.2 is not set out as an exception to the text of this section, the last column of the table can be read to allow for pipe greater than ¾ inch to be uninsulated if it is part of a run of up to 5 feet from a manifold or recirculation loop. The last column of the table is at best ambiguous, at worst contradictory. This proposal will resolve this ambiguity by removing pipe greater than ¾ inch from the table, reaffirming that all hot water pipe of this dimension must be insulated as per item (1) of Section R403.4.2.

Cost Impact: This code change proposal will not increase the cost of construction, except where the current language may be interpreted to allow for certain hot water pipe runs of up to 5 feet to remain uninsulated. At an estimated cost of materials, labor, and profit of $1.10 to $1.50 per linear foot of foam insulation installed, the additional cost for each such run would be in the range of five to seven dollars.

R135-13

Public Hearing:	Committee:	AS	AM	D
	Assembly:	ASF	AMF	DF

R403.4.2T #2-EC-OSANN.DOC

RE136-13

R403.4.2 (NEW) (IRC N1103.4.2 (NEW)), IPC 202, IPC [E]607.2.1.1 (NEW), IRC P2905 (NEW), IRC P2905.1 (NEW)

THIS IS A 3 PART CODE CHANGE PROPOSAL. PARTS I AND II WILL BE HEARD BY THE IECC-RESIDENTIAL ENERGY CONSERVATION CODE DEVELOPMENT COMMITTEE AS 2 SEPARATE CODE CHANGES. PART III WILL BE HEARD BY THE IRC-PM COMMITTEE. SEE THE TENTATIVE HEARING ORDERS FOR THESE COMMITTEES.

Proponent: Gary Klein, Affiliated International Management, LLC, representing self, gary@aim4sustainability.com

PART I – IECC-RESIDENTIAL PROVISIONS

Add new text as follows:

R403.4.2 (IRC N1101.4.2) Demand recirculation systems. A water distribution system having one or more recirculation pumps that pump water from a heated water supply pipe back to the heated water source through a cold water supply pipe shall be a *demand recirculation water system.* Pumps shall have controls that comply with both of the following:

1. The control shall start the pump upon receiving a signal from the action of a user of a fixture or appliance, sensing the presence of a user of a fixture or sensing the flow of hot or tempered water to a fixture fitting or appliance.
2. The control shall limit the water temperature increase in the cold water piping to not more than 10ºF (5.6 ºC) greater than the initial temperature of the water in the piping and limits the temperature entering the cold water piping to 102ºF (38.9 ºC).

PART II – IPC

Add new definition as follows:

DEMAND RECIRCULATION WATER SYSTEM. A water distribution system where one more pumps prime the service hot water piping with heated water upon demand for hot water.

Add new text as follows:

[E] 607.2.1.1 Demand recirculation controls. This section shall apply only to Group R2, R3 and R4 occupancies that are 3 stories or less in height above grade plane. A water distribution system having one or more recirculation pumps that pump water from a heated water supply pipe back to the heated water source through a cold water supply pipe shall be a *demand recirculation water system.* Pumps shall have controls that comply with both of the following:

1. The control shall start the pump upon receiving a signal from the action of a user of a fixture or appliance, sensing the presence of a user of a fixture or sensing the flow of hot or tempered water to a fixture fitting or appliance.

2. The control shall limit the water temperature increase in the cold water piping to not more than 10ºF (5.6 ºC) greater than the initial temperature of the water in the piping and limits the temperature entering the cold water piping to 102ºF (38.9 ºC).

PART III – IRC-P

Add new text as follows:

SECTION P2905
HEATED WATER DISTRIBUTION SYSTEMS

P2905.1 Demand recirculation systems. *Demand recirculation water systems* shall be in accordance with Section N1103.4.2.

Reason: The purpose of this code change proposal is to clarify the requirements for installing circulation pumps in applications that use a cold water supply pipe to circulate the water back to the water heater. Demand recirculation water systems are significantly more energy efficient than other recirculation systems and are inherently safer when the cold water supply is used as the return.

Figure 1 shows that demand activated circulation is significantly more energy efficient than any other type of heated water circulation system. The annual energy needed to keep the loop hot with water heated electrically or with natural gas are shown separately from the energy needed for the pump. The majority of the energy is lost in keeping the water in the loop at the desired temperature (all of it if there is a gravity loop). A small loop, 100 feet including the supply and the return was analyzed. The savings ranges from 87.5 percent when compared to a recirculation system that runs only 2-hours per day to 99 percent when compared to a recirculation system that runs only 24-hours per day. The operating costs and savings remain proportional as the length of the circulation loop and the flow rate of the pump increase.

Figure 1 Annual Energy Requirements for Demand Activated Circulation and Standard Recirculation

	Standard Recirculation						Demand Activated Circulation
	Daily Hours of Operation						
	24	12	8	6	4	2	0.25
Loop Heat Losses							
Natural Gas (therms)	292	146	97	73	49	24	3
Electric (kWh)	6,388	3,194	2,129	1,597	1,065	532	67
Pump Energy (kWh)	438	219	146	110	73	37	8

The inherently better safety comes from the fact that the controls specified for demand recirculation water systems limit the flow of water from the hot water supply into the cold water supply to only minutes a day and because they limit the temperature of the water that is allowed to go into the cold water supply. There are five other control strategies for heated water recirculation systems (thermosyphon (gravity), continuous pumping, timer controlled, bandwidth temperature sensor (aquastat) controlled and a combination of timer and bandwidth temperature sensor (aquastat) controlled and none of them has the ability to meet these stringent requirements.

The requirements of this section should be identical in both the IECC and the IPC, since the language for the controls does not depend on occupancy

For more information and background on issues related to hot water distribution and for a more detailed analysis in support of this proposal please go to http://www.aim4sustainability.com Follow the link on the home page to Codes.

Cost impact: This proposal will not increase the cost of construction, as it does not require the use of demand recirculation water systems. In addition, the ability to use cold-water supply piping as a return pipe may reduce the cost of installing a circulation loop.

RE136-13
PART I IECC-RESIDENTIAL PROVISIONS

Public Hearing:	Committee:	AS	AM	D
	Assembly:	ASF	AMF	DF

PART II IPC

Public Hearing:	Committee:	AS	AM	D
	Assembly:	ASF	AMF	DF

PART III IRC-P

Public Hearing:	Committee:	AS	AM	D
	Assembly:	ASF	AMF	DF

R403.4.2 (NEW) #1-EC-KLEIN

RE137-13

R202 (IRC N1101.9), R403.4.2 (NEW) (IRC N1103.4.2 (NEW)), R403.4.2.1 (NEW) (IRC N1103.4.2.1 (NEW)), Table R403.4.2.1 (NEW) (IRC Table N1103.4.2.1 (NEW)), R403.4.2.2 (NEW) (IRC N1103.4.2.2 (NEW)), R403.4.2.2.1 (NEW) (IRC N1103.4.2.2.1 (NEW)), IRC P2905 (NEW), IRC P2905.1 (NEW)

THIS IS A 2 PART CODE CHANGE PROPOSAL. PART I WILL BE HEARD BY THE IECC-RESIDENTIAL ENERGY CONSERVATION CODE DEVELOPMENT COMMITTEE. PART II WILL BE HEARD BY THE IRC-PM COMMITTEE. SEE THE TENTATIVE HEARING ORDERS FOR THESE COMMITTEES.

Proponent: Gary Klein, Affiliated International Management, LLC, representing self, (gary@aim4sustainability.com)

PART I-IECC RESIDENTIAL PROVISIONS

Add new text as follows:

R403.4.2 (IRC N1103.4.2) Efficient heated water supply piping. Heated water supply piping shall be in accordance with Section R403.4.2.1 or Section R403.4.2.2. The flow rate through ¼ inch piping shall not exceed 0.5 gpm (1.9 Lpm). The flow rate through 5/16 inch piping shall not exceed 1 gpm (3.8 Lpm). The flow rate through 3/8 inch piping shall not exceed 1.5 gpm (5.7 Lpm).

R403.4.2.1 (IRC N1103.4.2.1) Maximum allowable pipe length method. The maximum allowable piping length from the nearest source of heated water to the termination of the fixture supply pipe for *plumbing fixtures* and *plumbing appliances* shall be in accordance with the maximum piping length column~~s~~ in Table R403.4.2.1. Where the piping contains more than one size of pipe, the largest size of pipe within the piping shall be used for determining the maximum allowable length of the piping in Table R403.4.2.1.

TABLE R403.4.2.1 (IRC TABLE N1103.4.2.1)
PIPING VOLUME AND MAXIMUM PIPING LENGTHS

NOMINAL PIPE SIZE (inch)	VOLUME (liquid ounces per foot length)	MAXIMUM PIPING LENGTH (feet)	
		WATER FROM A WATER HEATER	WATER FROM A RECIRCULATION LOOP OR HEAT TRACED PIPE
1/4	0.33	50	50
5/16	0.5	50	48
3/8	0.75	50	32
1/2	1.5	43	16
5/8	2	32	12
3/4	3	21	8
7/8	4	16	6
1	5	13	5
1 ¼	8	8	3
1 ½	11	6	2
2 or larger	18	4	1

1 Gallon = 128 ounces. For SI: 1 inch=25.4 mm, 1 foot = 304.8 mm, 1 liquid ounce = 0.030 L

R403.4.2.2 (IRC N1103.4.2.2) Maximum allowable pipe volume method. The water volume in the piping shall be calculated in accordance with Section R404.4.2.2.1. The maximum volume from the nearest source of heated water to the termination of the fixture supply pipe for a *plumbing fixture* or

plumbing appliance shall be 0.5 gallon (1.89 L) where the source of heated water is a water heater; and 0.19 gallon (0.7 L) where the source of heated water is a recirculating system or heat-traced piping.

R403.4.2.2.1 (IRC N1103.4.2.2.1) Water volume determination. The volume shall be the sum of the internal volumes of pipe, fittings, valves, meters and manifolds between the nearest source of heated water and the termination of the fixture supply pipe. The volume in the piping shall be determined from the volume column in Table R403.4.2.1. The volume contained within fixture shut off valves, within flexible water supply connectors to a fixture fitting and within a fixture fitting shall not be included in the water volume determination. Where heated water is supplied by a recirculating system or heat-traced piping, the volume shall include the portion of the fitting on the branch pipe that supplies water to the fixture.

PART II IRC-P

Add new text as follows:

SECTION P2905
HEATED WATER DISTRIBUTION SYSTEMS

P2905.1 Heated water supply piping. Heated water supply piping shall be in accordance with Section N1103.4.2.

Reason: This change speeds hot water to the user, saves energy and water, and potentially lowers construction costs. All these are accomplished by limiting the volume of water in the pipes.

We have all have turned on the hot water and waited for it to get hot. While we wait water runs down the drain, wasting clean water. While we wait, our time is wasted. When we are done there is still hot water in the pipes, water which cools thereby wasting as much energy as it took to heat the water in the pipes. Pipes with larger volumes take longer to fill, waste more and are potentially more expensive to build.

This proposal remedies the problems above by reducing the water volume between the source of heated water and the use. The first method (Section R403.4.2.1) requires no calculation; it limits the water volume in the pipes by limiting the pipe length. The second option (Section R403.4.2.1) requires a calculation of volume in the pipes, but provides a table that translates the pipe length into a volume (columns 1 and 2); and provides quick options for different pipe assumptions in columns 3 and 4.

In simple form, cutting the volume in half: cuts the wait time in half, cuts the clean water wasted down the drain in half, cuts the energy loss while water goes through the pipes in half, and cuts the loss of energy from hot water left in the pipes after use in half.

A 2010 study done by the National Association of Home Builders Research Center shows the big impact of reducing hot water pipe volume. Figure 1, from that study, is below. The left half is for pipe 60 feet long. The right half is for pipe 30 feet long. Pick any case on the left and compare it to the same case on the right. Note there is always about a 50% reduction in piping energy lost in the 30-foot case. An example from the figure below, the energy loss of an uninsulated metal pipe 60 feet long drops from just over 10,000 kBtu to just over 5,000 kBtu for a pipe 30 feet long. Similarly uninsulated plastic pipe drops from about 7,300 kBtu to about 3,700 kBtu. The same pattern of reduction occurs when the piping is insulated.

Figure 1 Pipe Loss Comparison Using Parametric Analysis

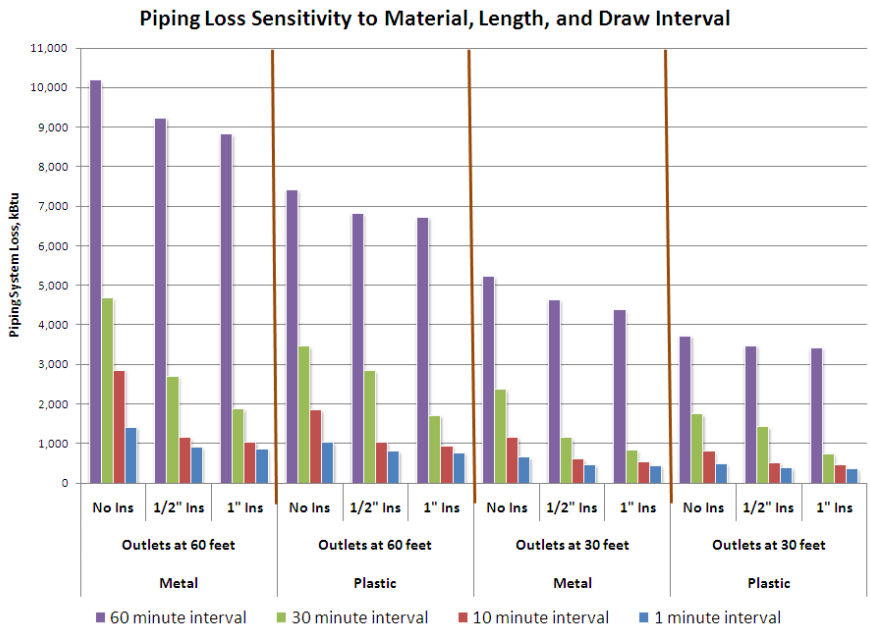

Source: Domestic Hot Water System Piping Insulation: Analysis of Benefits and Costs, Figure 4, page 10 of 24, NAHB Research Center, December 2010.

Why is the maximum volume 0.5 gallon when the source of heated water is a water heater? So that following standard practice for plumbing engineers and meeting the minimum requirements in the energy code will be aligned. At present, they are not, with the result that hot water delivery times are greater than 30 seconds after the tap is opened; unacceptable performance according to the American Society of Plumbing Engineers.

Why is the maximum volume 0.19 gallon when the source of heated water is a circulation loop or heat-traced pipe? In exchange for the flexibility in the location of the water heater relative to the plumbing fixtures and plumbing appliances, the allowable volume that will be wasted has been reduced and the time-to-tap improved so that it will almost always fall into ASPE's range for Acceptable Performance.

The definition proposed is used in both the IRC and the IPC.

For more information and background on issues related to hot water distribution and for a more detailed analysis in support of this proposal please go to http://www.aim4sustainability.com Follow the link on the home page to Codes.

Cost impact: There are several ways to meet the requirements of this proposal, many of which cost less than current piping practices. I would recommend that builders and developers select one of the less expensive methods.

RE137-13
PART I-IECC-RESIDENTIAL PROVISIONS

Public Hearing:	Committee:	AS	AM	D
	Assembly:	ASF	AMF	DF

PART II-IRC

Public Hearing:	Committee:	AS	AM	D
	Assembly:	ASF	AMF	DF

R403.4.2 #2 (NEW)-EC-KLEIN

RE138-13

R202 (IRC N1101.9), R403.4.2 (NEW) (IRC N1103.4.2 (NEW)), R403.4.2.1 (NEW) (IRC N1103.4.2.1 (NEW)), Table R403.4.2.1 (NEW) (IRC N1103.4.2.1 (NEW)), R403.4.2.2 (NEW) (IRC N1103.4.2.2 (NEW)), R403.4.2.2.1 (NEW) (IRC N1103.4.2.2.1 (NEW)), IRC P2905 (NEW), IRC P2905.1 (NEW)

THIS IS A 2 PART CODE CHANGE. PART I WILL BE HEARD BY THE IECC RESIDENTIAL ENERGY CONSERVATION CODE DEVELOPMENT COMMITTEE. PART II WILL BE HEARD BY THE IRC-PM COMMITTEE. SEE THE TENTATIVE HEARING ORDERS FOR THESE COMMITTEES.

Proponent: Gary Klein, Affiliated International Management, LLC, representing self, (gary@aim4sustainability.com)

PART I – IECC RESIDENTIAL PROVISIONS

Add new text as follows:

R403.4.2 (N1103.4.2) Efficient heated water supply piping. Heated water supply piping shall be in accordance with Section R403.4.2.1 or Section R403.4.2.2. The flow rate through ¼ inch piping shall not exceed 0.5 gpm (1.9 Lpm). The flow rate through 5/16 inch piping shall not exceed 1 gpm (3.8 Lpm). The flow rate through 3/8 inch piping shall not exceed 1.5 gpm (5.7 Lpm).

R403.4.2.1 (N1103.4.2.1) Maximum allowable pipe length method. The maximum piping length from the nearest source of heated water to the termination of the fixture supply pipe for a public lavatory faucet shall be in accordance with the maximum piping length column~~s~~ in Table R403.4.2. Where the piping contains more than one size of pipe, the largest size of pipe within the piping shall be used for determining the maximum allowable length of the piping in Table R403.4.2.1.

TABLE R403.4.2.1 (N1103.4.2.1)
PIPING VOLUME AND MAXIMUM PIPING LENGTHS

NOMINAL PIPE SIZE (inch)	VOLUME (liquid ounces per foot length)	MAXIMUM PIPING LENGTH (feet)
		LAVATORY FAUCETS—PUBLIC
1/4	0.33	6
5/16	0.5	4
3/8	0.75	3
1/2	1.5	2
5/8	2	1
3/4	3	0.5
7/8	4	0.5
1	5	0.5
1 ¼	8	0.5
1 ½	11	0.5
2 or larger	18	0.5

For SI: 1 inch=25.4 mm, 1 foot = 304.8 mm, 1 liquid ounce = 0.030 L

R403.4.2.2 (N1103.4.2.2) Maximum allowable pipe volume method. The maximum piping volume from the nearest source of heated water to the termination of the fixture supply pipe for a public lavatory

faucet shall be 2 ounces (0.06 L). The water volume in the piping shall be calculated in accordance with Section R404.4.2.2.1.

R403.4.2.2.1 (N1103.4.2.2.1) Water volume determination. The volume shall be the sum of the internal volumes of pipe, fittings, valves, meters and manifolds between the nearest source of heated water and the termination of the fixture supply pipe. The volume in the piping shall be determined from the volume column in Table R403.4.2.1. The volume contained within fixture shut off valves, within flexible water supply connectors to a fixture fitting and within a fixture fitting shall not be included in the water volume determination. Where heated water is supplied by a recirculating system or heat-traced piping, the volume shall include the portion of the fitting on the branch pipe that supplies water to the fixture.

PART II-IRC-P

Add new text as follows:

SECTION P2905
HEATED WATER DISTRIBUTION SYSTEMS

P2905.1 Heated water supply piping. Heated water supply piping shall be in accordance with Section N1103.4.2.

Reason: The problem of heated water taking an excessively long time to arrive at lavatory faucets in public restrooms is well known. The length of time the faucets are used during each hand washing event is very short, often around 5 seconds. Federal law requires low flow rate or small, metered volumes for the faucets in these applications. Health codes expect heated water for washing hands in these applications. The dilemma is that the volume of not-hot water in the piping from the source of hot water to the faucets is much too large for the heated water to arrive in a timely fashion; even at the 50-foot limit currently required in the 2012 IPC. Supporting this proposal will correlate the IECC with Federal law and local health codes by providing heated water for hand washing in a timely matter.

The delivery of hot water to public lavatory faucets needs to be considered separately because of potential health issues. The events are short and the flow rates are low. Table 1 shows the time-to-tap performance based on the requirements in the proposal. The 0.25 and 0.5 gpm columns are typical of the flow rates for public lavatory faucets. The volume in the pipe was chosen so that heated water would arrive in the first part of the hot water event so that every person who uses the public lavatory will have the benefits of hot water.

Table 1 Time-to-Tap Performance when the Volume in the Piping from the Source to the Use is 2 ounces

Volume in the Pipe (ounces)	Minimum Time-to-Tap (seconds) at Selected Flow Rates					
	0.25 gpm	0.5 gpm	1 gpm	1.5 gpm	2 gpm	2.5 gpm
2	3.8	1.9	0.9	0.6	0.5	0.4

The energy savings comes from not losing the heat from the water as it tries to arrive at the faucets.

For more information and background on issues related to hot water distribution please read the 4-part series at: http://www.allianceforwaterefficiency.org/Residential_Hot_Water_Distribution_System_Introduction.aspx

Cost impact: There are several ways to meet the requirements of this proposal, some of which cost less than current heated water system practices. I would recommend that builders and developers select one of the less expensive methods.

RE138-13
PART I- IECC RESIDENTIAL PROVISIONS

Public Hearing:	Committee:	AS	AM	D
	Assembly:	ASF	AMF	DF

PART II-IRC-P

Public Hearing:	Committee:	AS	AM	D
	Assembly:	ASF	AMF	DF

R403.4.2 #3 (NEW)-EC-KLEIN

RE139-13
R403.4.3 (NEW) (IRC N1104.4.3 (NEW))

Proponent: Eric Makela, Britt/Makela Group, Inc. representing Northwest Energy Codes Group (Eric@BrittMakela.com)

Add new text as follows:

403.4.3 (N1104.4.3) Electric Water Heater Insulation. Electric water heaters located in unheated spaces or on concrete floors shall be placed on an incompressible, insulated surface having a thermal resistance (R-value) of not less than R-10.

Exception: Electric water heaters in buildings in Climate Zones 1, 2 or 3 shall not be required to comply with this section.

Reason: The Washington State Residential Energy Code has required that electric water heaters located in unheated spaces and on concrete floors be placed on rigid foam insulation to reduce the heat loss from the bottom of the tank. Often these water heaters are placed in a garage or unheated basement. The standby losses through the bottom of the water heaters account for approximately 10% of the total losses in the tank which can be significant over the life of the water heater. Estimated energy savings for an electric water heater is between 22 and 25 kWH per year. Using an average electric rate of $.10/kWH the total savings will be between $2.20 and $2.50 per year. The cost of the insulation board is $8.00 so the payback on this measure would be between 2.5 to 3.2 years. This requirement is easy to implement measure is very enforceable.

Modeling Assumptions:

- Climate Location: 4,000 HDD 65
- Water Heater EF: 0.945 (NAECA requirement for 2015)
- Gallons of hot water use per day: 64.2 (per DOE test procedure) and 55
- Energy Cost: $0.10 kWh
- Stand-by losses through bottom of water heater: 10% of total standby loss
- Tank Setback Temperature: 125°F

Cost Impact: The code change proposal will minimally increase the cost of construction.

RE139-13

Public Hearing:	Committee:	AS	AM	D
	Assembly:	ASF	AMF	DF

R403.4.3 (NEW)-EC-MAKLEA.DOC

RE140-13
R403.5.1 (IRC N1103.5.1)

Proponent: Mike Moore, P.E., Newport Ventures, representing Broan-NuTone

Revise as follows:

R403.5.1 (IRC N1103.5.1) Whole-house mechanical ventilation system fan efficacy. Mechanical ventilation system fans shall meet the efficacy requirements of Table R403.5.1.

> ~~**Exception:** Where mechanical ventilation fans are integral to tested and listed HVAC equipment, they shall be powered by an electronically commutated motor.~~

Reason: At the current stage of development, mechanical ventilation fans that are integral to tested and listed HVAC equipment (also known as central fan integrated, or "CFI" systems), are notorious for their poor performance in regards to energy and/or ventilation, and no special exception should be made in regard to their energy performance. Following are typical known problems with CFIs that are arguments to remove this exception and hold them to the same efficacy standards as other ventilation systems.

- CFIs with electronically commutated motors (ECMs) use much more fan energy than other code-approved ventilation systems: According to IRC M1507, a 2200 sqft, 3 bedroom dwelling has a ventilation flow rate requirement of 60 cfm. Suppose this dwelling has a 3 ton AC unit that has an ECM that operates at 2.5 cfm/W, a typical fan efficacy for ECMs. At the industry sizing standard of 400 cfm/ton, the central fan can be expected to use roughly 480 Watts of power when supplying ventilation air (3*400/2.5=480). Factory settings for typical CFI controllers are set to cycle the central fan for 10 minutes out of every thirty, meaning that to achieve the average 60 cfm code required ventilation rate, 180 cfm of ventilation air must be provided by the CFI system during the 10 minutes of run time (3x the ventilation rate required because only ventilating 1/3 the time). Over an entire year (8760 hours), this system would use 1400 kWh of fan energy to provide the ventilation air required (8760*1/3*480/1000=1400 kWh). To be fair, when the pre-scheduled ventilation run time overlaps with the run time of the central fan for heating or cooling, some of this ventilation fan energy is "free"; however, central fans typically only operate about 20% of the year for heating and cooling. Assuming that this heating and cooling operation is spread out equally across all time, the net fan energy use of the system would be 20% less, or 1120 kWh. Compared to types of ventilation systems that operate at minimum efficacy levels required by this section (e.g., 1.4 cfm/W), the net fan energy use of the CFI system with an ECM uses roughly three times as much fan energy (1120 kWh versus 375 kWh per year). The difference in fan energy use is 745 kWh (1120-375=745), which is about enough to power two typical Energy Star rated refrigerators for an entire year! Obviously, CFI systems with ECMs are a bad choice from an energy perspective, and should not be given an exception within this section.
- Inability to achieve ASHRAE 62.2 and 2012 IRC required flow rates at more than one fan speed setting: (i.e., if code compliant flow is confirmed while the central fan is in cooling mode, lower fan flow rates in heating and fan only mode will not meet the IRC requirements)
- Potential for over-ventilation and wasted energy: If 2012 IRC flow rates are confirmed at the fan's low speed setting (e.g., in heating mode), then these units are likely to severely over-ventilate at higher speed settings (e.g., in cooling mode), wasting energy.
- Difficult-to-confirm flow rates: Unlike HRVs that often ship with pressure taps to calibrate flows or exhaust systems that are easily measured with low cost devices, CFI systems can be very difficult to validate flow rates and so in practice, confirmation of flow rates is seldom done, meaning the system could be over-ventilating (wasting even more energy for heating and cooling), or under-ventilating, meaning adequate indoor air quality is not being achieved.

Cost Impact: No impact to cost. Many other systems are available that at the same or lower cost as CFI systems with ECMs.

RE140-13

Public Hearing:	Committee:	AS	AM	D
	Assembly:	ASF	AMF	DF

R403.5.1 #1-EC-MOORE.DOC

RE141-13

R403.5.1 (IRC N1103.5.1), Table R403.5.1 (IRC Table N1103.5.1), R403.5.2 (NEW) (IRC N1103.5.2 (NEW))

Proponent: Mike Moore, P.E., Newport Ventures, representing Broan-NuTone

Revise as follows:

R403.5.1 (N1103.5.1) Whole-house mechanical ventilation system fan efficacy. ~~Mechanical ventilation system fans shall meet the efficacy requirements of Table R403.5.1.~~ This section shall not apply to mechanical ventilation fans that are integral to tested and listed HVAC equipment and that are powered by electronically commutated motors. Fans serving as a component of whole-house mechanical ventilation systems shall be in accordance with the following:

1. Exhaust fans shall have a fan efficacy of not less than 8 cfm/W (0.004 m^3/W).
2. Supply fans shall have a fan efficacy of not less than 4 cfm/W (0.002 m^3/W).
3. Heat recovery ventilator fans and energy recovery ventilator fans shall have a net air flow fan efficacy of not less than 1.0 cfm/W (0.0005 m^3/W).

~~**Exception:** Where mechanical ventilation fans are integral to tested and listed HVAC equipment, they shall be powered by an electronically commutated motor.~~

~~**Table R403.5.1 (N1103.5.1)**~~
~~**MECHANICAL VENTILATION SYSTEM FAN EFFICACY**~~

~~**FAN LOCATION**~~	~~**AIR FLOW RATE MINIMUM (CFM)**~~	~~**MINIMUM EFFICACY (CFM/WATT)**~~	~~**AIR FLOW RATE MAXIMUM (CFM)**~~
~~Range~~	~~Any~~	~~2.8 cfm/watt~~	~~Any~~
~~In-line fan~~	~~Any~~	~~2.8 cfm/watt~~	~~Any~~
~~Bathroom, utility room~~	~~10~~	~~1.4 cfm/watt~~	~~< 90~~
~~Bathroom, utility room~~	~~90~~	~~2.8 cfm/watt~~	~~Any~~

~~For SI: 1 cubic foot per minute = 28.3 L/min.~~

R403.5.2 (N1103.5.2) Recovery ventilator efficiency. Heat recovery ventilators shall have a sensible recovery efficiency of not less than 65 percent at 32°F (0°C). Energy recovery ventilators shall have a total recovery efficiency of not less than 45 percent at 95°F (35°C).

Reason: The purpose of this proposal is to reduce the energy use impact of whole house mechanical ventilation (WHMV) fans. This change is needed because these fans operate for long duty cycles and can have a significant impact on the energy use of the home. Following is the justification for the various efficacy requirements by system type.

Exhaust Fans
This proposal increases the efficacy requirement for exhaust fans to 8 cfm/W. This improvement in efficacy will reduce the fan energy use of minimum code compliant exhaust only WHMV systems by over 80%. This level of efficacy is available today from multiple manufacturers based on the use of brushless DC fans, and the cost premium is roughly $100. This first cost premium is easily recovered when the whole-house mechanical ventilation fans are operated continuously, per design (~32 month simple payback; assumptions include: $0.12/kWh, 60 cfm, 1.4 cfm/W efficacy for current 2012 IECC minimum fan, 8.0 cfm/W efficacy for new code minimum). The length of this payback is expected to fall even further with time.

Supply Fans
The brushless DC motors that are becoming much more common in exhaust fans have not yet been widely adopted in supply fans. So, this proposal strikes a compromise between increasing energy efficiency and ensuring that are plenty of market-available products. Over 35% of the fans capable of providing supply ventilation in the Energy Star database achieve a minimum efficacy of 4 cfm/W, and these fans are provided by a wide range of manufacturers (87% of the manufacturers of this product class manufacture fans at 4 cfm/W or greater). With such a wide array of products available, there is little to no expected additional cost to specify a 4 cfm/W supply fan versus the current 2012 IECC minimum of 1.4 cfm/W.

Energy Recovery (ERVs) and Heat Recovery (HRVs) Ventilators
The 2012 IECC completely exempts HRVs and ERVs from any efficacy requirements (addresses supply, exhaust, and central integrated systems, but ignores H&ERVs). The reason for this free pass is that H&ERVs are supposed to be inherently more energy efficient than systems that do not include heat or energy recovery. However, building energy simulations show that simply

installing any HRV or ERV is not sufficient to guarantee energy savings versus exhaust or supply only WHMV systems. Rather, net air flow fan efficacy and recovery efficiency are key components to assuring expected performance.

So, for HRVs, this proposal establishes "a minimum sensible recovery efficiency of 65%, and a minimum net air flow fan efficacy of 1.0 cfm/W." The sensible recovery efficiency of 65% is the minimum criteria established in Canada to qualify as an Energy Star HRV. The fan efficacy of 1.0 cfm/W is the average efficacy of the two tiers of HRVs under the same criterion. Further, based on manufacturer feedback, the overwhelming majority of HRV units sold now meet these criteria. For ERVs, there is no performance specification to reference, so this proposal establishes "a minimum total recovery efficiency of 45%, and a minimum net air flow fan efficacy of 1.0 cfm/W." These criteria are very achievable based on industry data of available products. Following are charts that show the performance characteristics of ERV and HRV units that are currently available (data from the Home Ventilating Institute, current as of November 2012). Units in the green boxes would meet these criteria, demonstrating that only the worst HRVs and ERVs would not be permitted to be installed. While the TRE and SRE metrics may be new to code officials, they are published by manufacturers and by the Home Ventilating Institute, so are easily referenced.

Also, selection of an ERV or HRV is not mandated by this section, and the builder is always free to choose a lower cost system.

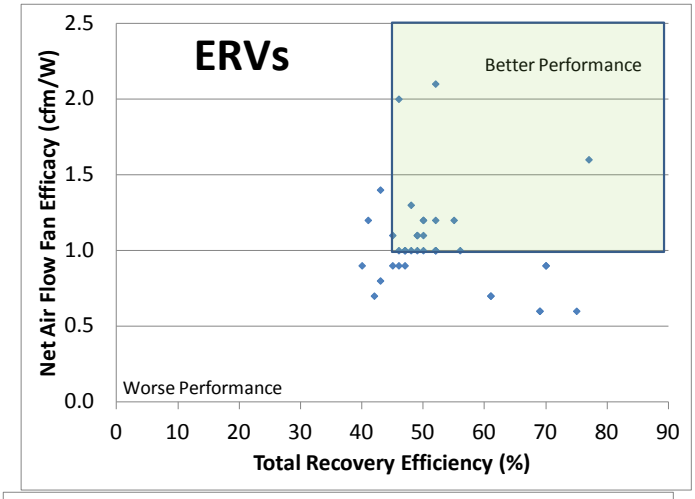

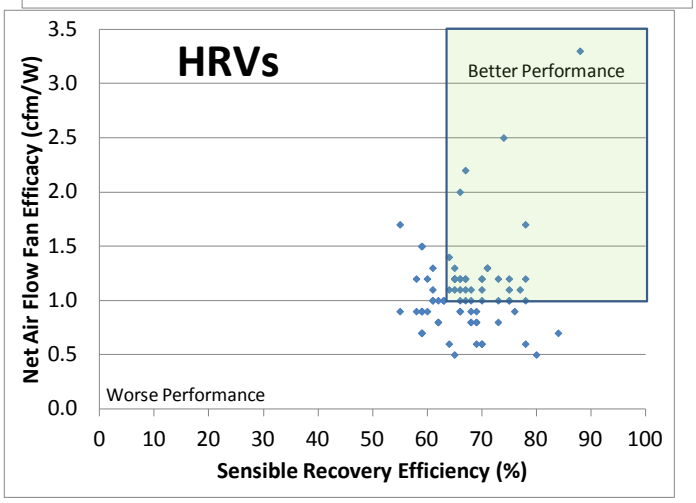

Cost Impact: Builders are able to control costs by selecting from multiple approved system types. Where there are additional first costs, they can be recovered quickly through energy savings. Further, economies of scale are expected to drive down current incremental costs.

RE141-13

Public Hearing:	Committee:	AS	AM	D
	Assembly:	ASF	AMF	DF

R403.5.1 #2-EC-MOORE.DOC

RE142-13
R403.6 (IRC N1103.6)

Proponent: Brian Dean, Energy Efficient Codes Coalition; Garrett Stone, Brickfield Burchette Ritts & Stone, PC; Jeff Harris, Alliance to Save Energy; Harry Misuriello, American Council for an Energy-Efficient Economy; and Bill Prindle, Energy Efficient Codes Coalition.

Revise as follows:

R403.6 (N1103.6) Equipment sizing <u>and efficiency rating</u> (Mandatory). Heating and cooling equipment shall be sized in accordance with ACCA Manual S based on building loads calculated in accordance with ACCA Manual J or other *approved* heating and cooling calculation methodologies. <u>New or replacement heating and cooling equipment shall have an efficiency rating equal to or greater than the minimum required by federal law for the geographic location where the equipment is installed</u>

Reason: The purpose of this code change is to codify the requirement that HVAC equipment must satisfy federal minimum requirements for the location. This proposal does not establish new requirements since it simply requires that equipment meet the federal standard, but it allows the code official to enforce the requirements. This proposal improves the effectiveness of the code by reinforcing a practice that should already be taking place in plan review and inspection -- verification of the efficiency rating of heating and cooling equipment. Although federal rules set the minimum efficiency levels for manufacturers, only code officials can determine whether equipment actually installed in buildings meets or exceeds the federal minimums. The EECC has offered a similar proposal for service hot water equipment under section R403.4.

This proposal is more important now than in the past because federal minimums are expected to shift away from single nationwide efficiency levels to regionally-based efficiency levels that will vary from state to state. It is possible, whether by accident or bad intent, to see equipment that would meet federal requirements in one jurisdiction used in other states or regions in which it does not meet the regional requirement. Although this verification may already be taking place, the proposal above is intended to make it a specific requirement in all buildings. This is an important opportunity for federal, state and local governments to work together to ensure that equipment installed meets federal minimums for the location.

Cost Impact: The code change proposal will not increase the cost of construction.

RE142-13

Public Hearing:	Committee:	AS	AM	D
	Assembly:	ASF	AMF	DF

R403.6-EC-DEAN-HARRIS-MISURIELLO-PRINDLE-STONE.DOC

RE143 – 13
R403.6 (IRC N1103.6)

Proponent: Philip Debes, Dan Deen, Steve Frazer, Lloyd Larkin, Allan Tyson, Jim Walker, all of P and N Distribution, Inc. representing themselves. Clifton Payne of DNV KEMA (Det Norske Veritas and Keuring Elektrotechnische Materialen Arnhem) Energy and Sustainability, representing Energy Design Systems, Philip Jeffers, Energy Design Systems, Inc, representing self, Scott Miller, Knauf Insulation representing self

Revise as follows:

R403.6 (N1103.6) Equipment Sizing (Mandatory). Heating and cooling equipment shall be sized in accordance with ~~ACCA Manual S based on building loads calculated in accordance with ACCA Manual J or other *approved* heating and cooling calculation methodologies.~~ standard engineering heat loss and heat gain formulas coupled with appropriate weather data, home construction materials and other considerations normally used in the HVAC industry.

Reasons:

[DEBES, DEEN, FRAZER, LARKIN, TYSON, WALKER] ACCA Manual J and ACCA Manual S are trademarks. Code officials mistakenly believe ACCA is the certifying agent for IECC code compliance. ACCA charges royalties for ACCA approved software and resells software directly to contractors. ACCA is an HVAC software competitor, not a certifying authority.

[PAYNE] ACCA Manual J and ACCA Manual S are trademarks. ACCA is not the certifying agent for IECC code compliance, as ACCA Code officials appear to mistakenly believe. ACCA charges royalties for ACCA approved software and resells software directly to contractors. ACCA is an HVAC software competitor, not a certifying authority. By referencing ACCA in R403.6, the IECC would be selecting and endorsing one product from the marketplace over overs, not simply providing a standard that should be used to size HVAC equipment. This would create an unlevel playing field by providing ACCA with a competitive advantage.

[JEFFERS]
1. ACCA Manual J and ACCA Manual S are trademarks. ACCA and ACCA's software partners are using the IECC code to intimidate contractors. See attachment 1: ACCA "Contractors Beware", See attachment 2: Bob Volin, ACCA Code Committee Member, Photo Shopping his Letterhead onto the Code's Section R403.6 and convincing contractors into buying "ACCA Approved Software" and trying to force software developers into royalty payments totaling millions of dollars. ACCA is restraining trade, eliminating competition, and inhibiting development of more accurate software and procedures. Building Inspectors mistakenly interpret "in accordance with" to mean "approved by". ACCA uses this fact to create a de-facto IECC software certification process, making millions in fees, royalties, and reselling the software ACCA "approves". ACCA is a software competitor and Section R403.6 creates unfair competition.

2. For existing houses ACCA's Manual J procedure has no relationship to any sound engineering practice. None of the inputs such as a home's leakage rate, duct loss/gain, or any other value are known, and these inputs can have wide tolerances. Contractors use inputs that give them the answers they want. This is called confirmation Bias. An ACCA load calculation on an existing house is no different from guessing the size. The fact that contractors work ACCA's procedure backwards is widely known in the HVAC industry. ACCA load calculations average 140% of operating loads and can contribute to comfort, health, safety issues, and dramatically overstate energy usage.

> "they simply change some of the inputs to make the procedure spit out answer they're comfortable with and no one questions their answers." - Hank Rutkowski P.E. Author ACCA Manual J.

3. There is no evidence what so ever that "proper sizing" saves energy.

ATTACHMENT #1

From: Melissa Broadus, ACCA [mailto:melissa.broadus@acca.org]
Sent: Tuesday, September 06, 2011 2:40 PM
To: don@donwestcooling.com
Subject: ACCA NEWS: Contractors: Beware of Inappropriate Load Calculation Software

For Immediate Release
September 6, 2011
Media Contact: Melissa Broadus, 703-575-4477 melissa.broadus@acca.org

Contractors: Beware of Inappropriate Load Calculation Software

Manual J ® is the ANSI-approved national standard for determining residential load calculations for HVACR systems, and is required by many building codes and regulations. It is produced by the Air Conditioning Contractors of America (ACCA), the nation's largest association of indoor environmental systems professionals.

Given the complexities of modern construction, contractors and design professionals are encouraged to use software for accurate system design. However, not all load calculation software is created equal.

ACCA is reminding contractors that only those software programs that have been approved and licensed by ACCA as "Powered by Manual J ®" can be considered in compliance with codes and regulations requiring the use of Manual J ®.

As of today, the only software programs that meet the requirements for Manual J ® load calculations are:

- **RHVAC Residential Load Calculation from Elite Software**
- **Right – J from Wrightsoft**
- **AccuLoads from ADTEK Software Company**
- **Florida Solar Energy Center's EnergyGauge**

Any other software program, online service or mobile application cannot be considered to be compliant with the Manual J ® standard and should not be used where Manual J ® is required. Use of non-authorized software may pose a liability for the contractor that installs the system.

For more information on Manual J ®, the ACCA system design process, and load calculation software, visit https://www.acca.org/industry/system-design.

Software providers interested in applying for validation and licensing of their product should contact Glenn Hourahan at glenn.hourahan@acca.org.

Manual J ® is a registered federal trademark of the Air Conditioning Contractors of America.

The Air Conditioning Contractors of America (ACCA) is a non-profit association serving more than 60,000 professionals and 4,000 businesses in the HVACR community, who work together to promote professional contracting, energy efficiency, and healthy, comfortable indoor environments for all Americans. For more information, visit www.acca.org.

You are receiving this email because you are a member of ACCA and asked to receive communications by email, or you subscribed through our website. To manage your email preferences or to unsubscribe, go to options. To change your email address, please reply to this email with your new address in the body.

Air Conditioning Contractors of America 2800 Shirlington Road, Suite 300 | Arlington, VA 22206 | 703-575-4477 | www.acca.org

ATTACHMENT #2

Air Design Concepts, Inc.

Contractors: Beware of Inappropriate Load Calculation Software

Contractor Alert!

By now most you know as of March 15th 2012 load calculation will be required on
ALL AC CHANGE OUTS.

101.4.7.1.2 Replacement equipment sizing (mandatory). An A/C contractor or licensed Florida PE shall submit a nationally recognized method based sizing calculation to the code official at the time of permit application for total replacement of the condensing and evaporator components of HVAC systems in accordance with Florida law and the provisions of Section **403.6.1**or Section **503.2.1**.as applicable.

403.6 Heating and cooling equipment (Mandatory).

403.6.1 Equipment sizing. Heating and cooling equipment shall be sized in accordance with ACCA Manual S based on the equipment loads calculated in accordance with **Manual J or other approved heating and cooling calculation methodologies,** based on building loads for the directional orientation of the building. The manufacturer and model number of the outdoor and indoor units (if split system) shall be submitted along with the sensible and total cooling capacities at the design conditions described in Section 302.1. This Code does not allow designer safety factors, provisions for future expansion or other factors which affect equipment sizing.

Approved methodologies by Florida code

- ACCA Manual J
- ASHRAE
- Florida PE

Manual J ® is the ANSI-approved national standard for estimating residential heating and cooling loads for HVACR systems. It is the reference cited in both national model building codes. Authorities having jurisdiction (AHJ) may approve alternative methods of load calculation, however, most AHJs recognized Manual J8 due to its long history and wide acceptance in the HVAC industry. Manual J is produced by the Air Conditioning Contractors of America (ACCA), the nation's largest association of indoor environmental systems professionals.

Given the complexities of modeling modern construction, HVAC contractors and other design professionals are encouraged to use software for accurate system design. However, not all load calculation software is created equal. ACCA is reminding contractors that only those software programs that have been approved and licensed by ACCA as "Powered by Manual J ®" can be considered compliant with the procedure referenced in the model codes.

As of today, the only software programs that meet the requirements for Manual J ® load calculations are:

- **RHVAC Residential Load Calculation from Elite Software**
- **Right – J from Wrightsoft**
- **AccuLoads from ADTEK Software Company**
- **Florida Solar Energy Center's EnergyGauge**

Any other software program, online service or mobile application, or stating they are based upon, cannot be considered to be compliant with the Manual J ® standard and should not be used where Manual J ® is required. Use of non-authorized software may pose a liability for the contractor that represents that they have complied with the Manual J® procedures.

[MILLER] ACCA Manual J and ACCA Manual S are trademarks. Code officials mistakenly believe ACCA is the certifying agent for IECC code compliance. ACCA charges royalties for ACCA approved software and resells software directly to contractors. ACCA is an HVAC software competitor, not a certifying authority.

ACCA Manual S and Manual J are trademarks of ACCA. According to ACCA, all software must be approved by ACCA or it does not comply with the intent of the IECC R-code and there are significant fees associated with the ACCA approval process. From the following link demonstrates that ACCA believes it has authority to appraise and charge a fee to other software developers for all software used in the IECC 2012 load calculation process:

https://www.acca.org/archives/news-and-media/news-room/press-releases/5524

The contents of the above link are as follows and the highlighted portion should be considered problematic from a trade restriction standpoint. It can be proven that this position has cost manufacturers significant sales because the manufacturer's software (while correct) has not been approved by and fees paid to ACCA.

Contractors: Beware of Inappropriate Load Calculation Software

For Immediate Release:
September 6, 2011
Contact: Melissa.Broadus@acca.org
703-824-8842

Manual J ® is the ANSI-approved national standard for determining residential load calculations for HVACR systems, and is required by many building codes and regulations. It is produced by the Air Conditioning Contractors of America (ACCA), the nation's largest association of indoor environmental systems professionals.

Given the complexities of modern construction, contractors and design professionals are encouraged to use software for accurate system design. However, not all load calculation software is created equal.

ACCA is reminding contractors that only those software programs that have been approved and licensed by ACCA as "Powered by Manual J ®" can be considered in compliance with codes and regulations requiring the use of Manual J ®.

As of today, the only software programs that meet the requirements for Manual J ® load calculations are:

- **RHVAC Residential Load Calculation from Elite Software**
- **Right – J from Wrightsoft**
- **AccuLoads from ADTEK Software Company**
- **Florida Solar Energy Center's EnergyGauge**

Any other software program, online service or mobile application cannot be considered to be compliant with the Manual J ® standard and should not be used where Manual J ® is required. Use of non-authorized software may pose a liability for the contractor that installs the system.

For more information on Manual J ®, the ACCA system design process, and load calculation software, visit https://www.acca.org/industry/system-design.

Cost Impact: The code change proposal will not increase the cost of construction.

RE143-13

Public Hearing:	Committee:	AS	AM	D
	Assembly:	ASF	AMF	DF

R403.6-EC-DEBES.DOC

RE144-13
R403.6 (IRC N1103.6)

Proponent: Richard Grace, Virginia Plumbing and Mechanical Inspectors Association and Virginia Building and Code Officials Association (Richard.Grace@fairfaxcounty.gov)

Revise as follows:

R403.6 (N1103.6) Equipment and appliance Sizing (Mandatory). Heating and cooling equipment and appliances shall be sized in accordance with ACCA Manual S based on building loads calculated in accordance with ACCA Manual J or other approved heating and cooling calculation methodologies.

Exception: Heating and cooling equipment and appliances shall not be limited to the capacities determined in accordance with Manual S where any of the following conditions apply:

1. The specified equipment or appliance utilizes multi-stage technology or variable refrigerant flow technology and the loads calculated in accordance with Manual J fall within the range of the manufacturer's published capacities for that equipment or appliance.
2. The specified equipment or appliance manufacturer's published capacities cannot satisfy both the total and sensible heat gains calculated in accordance with Manual J and the manufacturer's next larger standard size unit is specified.
3. The specified equipment or appliance is the smallest capacity unit available from the specified manufacturer.

Reason:

Item 1 - Current technology is widely available that incorporates multi-stage or VRF systems for increased efficiency. Some of these appliances have such a wide span of functionality that they extend beyond the allowable requirements outlined in Manual S. However, this technology allows the appliance to operate between minimum and maximum capacities, based on loads imposed, thus eliminating the problems associated with single-stage, oversized appliances. Additionally, the appliance will operate efficiently during times where outdoor air temperatures exceed those used to calculate the loads in Manual J.

Item 2 - Often times, the appliance manufacturer's published total and sensible capacities are at odds with the requirements of Manual S. There are many cases where the total capacity of the appliance will fall within the parameters of Manual S in relation to the calculated total gain, however the sensible capacity of the appliance may fall short of the calculated sensible gain, thus unable to provide efficient sensible cooling for the space. When the manufacturer's next standard size larger is chosen to meet the sensible gain, the total capacity of the appliance may then exceed the requirements of Manual S. Choosing the larger appliance will enable a more efficient and effective system.

Item 3 - The current code language does not have provisions for sizing appliances for minimal dwelling unit or dwelling addition loads, other than forcing owners and contractors to change appliances to less desirable systems. For example; a 2 story townhouse, in climate zone 4, with 600 square feet per floor wants to utilize a two-zone system, or a separate heat pump system for each floor. A 1.5 ton unit per floor would exceed the requirements of Manual S, however a 1.5 ton unit could be the smallest available appliance made by the desired manufacturer. Current language would require a complete design change, such as utilizing a single appliance to serve the entire dwelling rather than the more desirable two-zone system, or requiring a system that utilizes electric baseboard heating and window-mounted air conditioning units. This is absurd, and an unfair to an owner that desires to reduce energy costs.

Cost Impact: None

RE14413

Public Hearing:	Committee:	AS	AM	D
	Assembly:	ASF	AMF	DF

R403.6-EC-GRACE.DOC

RE145-13
R403.9.3 (NEW) (IRC N1103.9.3.1 (NEW))

Proponent: Edward R. Osann, Natural Resources Defense Council, on behalf of self (eosann@nrdc.org)

Add new text as follows:

R403.9.3.1 (N1103.9.3.1) Mechanical retraction mechanism. Vapor retardant pool covers having a dry weight of 40 lbs (18.1 kg) or more for heated pools associated with one- or two-family homes shall be provided with a mechanical retraction mechanism. The mechanism shall be designed for the cover material, the cover weight and the dimensions of the cover.

Reason: Pool covers serve to retain heat in heated pool systems and reduce water loss due to evaporation – but only when used. Swimming pools at single-family residences are frequently not professionally managed or maintained, and such pools are most likely to go for several consecutive days without use. These characteristics support the use and value of a pool cover. However, the frequent deployment and retraction of a large pool cover by an individual swimmer in a single-family setting is problematic, contributing to widespread disuse of this valuable energy- and water-saving feature.

This proposal would require a pool cover to come with a means for mechanical retraction if it weighs 40 pounds or more. While the most common type of floating cover material is relatively light (0.1 lb per ft^2), the weight of a cover for a moderately sized back yard pool (18' X 36') can surpass 60 lbs. and be unwieldy for an individual to handle. The proposal is not specific as to the means or design of the device for mechanical retraction, and does *not* require a permanently affixed automatic retraction system. A hand operated device of suitable size would meet the requirements of this proposal.

Cost Impact: Hand operated mechanical equipment for the retraction of pool covers are marketed at around $200, and are available from several manufacturers. At least 5 manufacturers provide automatic pool cover equipment.

RE145-13

Public Hearing:	Committee:	AS	AM	D
	Assembly:	ASF	AMF	DF

R403.9.3.1 (NEW)-EC-OSANN.DOC

RE146-13
R403.10 (NEW) (IRC N1103.10 (NEW))

Proponent: Steve Rosenstock, Edison Electric Institute, representing Edison Electric Institute (srosenstock@eei.org(

Add new text as follows:

R403.10 (N1103.10) Fireplace systems (Mandatory). Fuel gas fired fireplace systems shall not have continuously burning pilot lights.

Reason: This language is consistent with the language on continuously burning pilot lights for pool heaters and gas lighting systems in the IECC. As of April 2012, under a 2009 US Department of Energy rulemaking, residential gas cooking equipment is not allowed to have continuously burning pilot lights.

According to the Hearth, Patio, and Barbecue Association, between 573,000 and 1,017,000 gas fireplace / hearth systems were shipped to North America every year between 2008 and 2011 (about 67 to 70% of total hearth shipments. See http://www.hpba.org/index.php?id=238 for more details). Many of these units are shipped to new homes with continuously burning pilot lights, ranging from 800 to 1,200 Btu's per hour. For a fireplace that has a pilot light using 1,000 Btu/hr, and is in "standby" mode for about 8000 hours per year (assuming that the fireplace is used 5 hours per day for 150 days of the year), the pilot light uses 8 million Btu's, or 80 therms. At a national average cost of $1.06 per therm, the cost to a typical consumer is nearly $85 per year.

With propane systems, 8 million Btu's is equivalent to 87.59 gallons. At a national average cost of $2.56 per gallon (*Federal Register* page 24940 April 26, 2012, Representative Average Unit Costs of Energy), the cost to a propane consumer is slightly more than $224 per year.

As a reference point, according to the 2010 AGA *Gas Facts 2008*, a typical gas range uses about 52 therms (5.1 Mcf) per year, and a typical clothes dryer uses about 50 therms (49 Mcf) per year (Table 10-1, page 78). In fact, according to the AGA publication, in the Pacific region of the US, residential natural gas fireplaces use more energy (28.3 Mcf) than a typical residential natural gas water heater (22.1 Mcf) and gas range (5.1 Mcf) combined.

Significant energy savings are available with current technology. With advanced controls (electronic spark ignition, for example), the standby energy losses are eliminated, and the average US consumer saves nearly $85 to $224 per year, based on the examples shown.

Cost Impact: The code change proposal will not increase the cost of construction. Electronic ignitions are widely available.

RE146-13

Public Hearing:	Committee:	AS	AM	D
	Assembly:	ASF	AMF	DF

R403.10-EC-ROSENSTOCK.DOC

RE147-13

R403.10 (NEW) (IRC N1103.10 (NEW)), Table R403.10 (NEW) (IRC Table N1103.10 (NEW))

Proponent: Craig Conner, Building Quality representing self (craig.conner@mac.com)

Add new text as follows:

R403.10 (N1103.10) Improved equipment efficiency alternative. Where the installed equipment efficiency exceeds the applicable minimum federal equipment efficiency by the amount given in Table R403.10, the following shall apply:

1. The maximum air leakage rate in Section 402.4.1.2 shall be increased by 1 ACH50.
2. The maximum duct leakage in Section 403.2.2 shall be increased by 1 CFM / 100 ft^2.

TABLE R403.10 (N1103.10)
EQUIPMENT EFFICIENCY TRADEOFF

ZONE	INCREASED EQUIPMENT EFFICIENCY
1 and 2	1.5 SEER
3	1 SEER and 6 AFUE
4	6 AFUE
5-8	7 AFUE

Reason: This allows increased equipment efficiency to compensate for an increase in envelope and duct air leakage. The increased equipment efficiency applies to cooling in the south and heating in the north. In order to propose this tradeoff a climate zone specific trade needed to be made. This tradeoff uses the DOE computed ratios for increased equipment efficiency vs increased envelop and duct leakage by climate zone. This ratio was as taken from DOE's EC13 proposal of the last code cycle. DOE proposed a tradeoff of increased equipment efficiency for a reduction in air tightness and duct tightness requirements, although that version was not approved in the 2012 IECC.

Unexpected failures in envelope tightness and duct tightness may occur. Increased equipment efficiency represents a simple way to correct the problem of an unexpected test failure in a residence that is almost completed. This proposed option is also an alternative for those who choose not to try for a residence as tight as the new code. Those who wanted a more complete, but more complex, calculation could still use the performance analysis.

The Federal equipment efficiency requirements may be increased in the near future. Therefore this is proposed as an increment above the applicable Federal equipment efficiency and could apply whether or not the equipment efficiency minimums were raised.

Cost Impact: The code change proposal will not increase the cost of construction.

RE147-13

Public Hearing:	Committee:	AS	AM	D
	Assembly:	ASF	AMF	DF

R403.10 (NEW)-EC-CONNER

RE148-13
R404.1 (IRC N1104.1)

Proponent: Craig Conner, Building Quality, representing self (craig.conner@mac.com)

Revise as follows:

R404.1 (N1104.1) Lighting equipment (Mandatory). ~~A minimum of 75 percent of the~~ Lamps in permanently installed lighting fixtures shall be high-efficacy lamps. ~~or a minimum of 75 percent of the permanently installed lighting fixtures shall contain only high-efficacy lamps.~~

Exceptions:

1. Lamps in low-voltage lighting ~~shall not be required to utilize high-efficiency lamps~~.
2. Lamps in lighting controlled by a dimmer or automatic control device.
3. Lamps that are 15 watts or less.
4. Lamps in lighting built into appliances.
5. Lamps in lighting automatically controlled to respond to daylighting devices.

Reason: This removes the need to count fixtures and bulbs. Lighting is supposed to be efficient. Several exceptions are added.

Cost Impact: The code change proposal will not increase the cost of construction.

RE148-13

Public Hearing:	Committee:	AS	AM	D
	Assembly:	ASF	AMF	DF

R404.1-EC-CONNER.DOC

RE149-13
R202 (IRC N1101.9), R404.1 (IRC N1104.1)

Proponent: Deborah Frankhouser, Four Point Lighting Design, representing the International Association of Lighting Designers (deborah@fourpointlighting.com)

Revise as follows:

R404.1 (N1104.1) Lighting equipment (Mandatory). ~~A minimum of 75 percent of the lamps in permanently installed lighting fixtures shall be high-efficacy lamps or a minimum of 75 percent of the permanently installed lighting fixtures shall contain only high efficacy lamps.~~ Permanently installed lighting shall be *high efficiency luminaires*.

Exceptions: ~~Low-voltage lighting shall not be required to use high-efficiency lamps.~~

1. High efficiency luminaires shall not be required where the lamps operate at less than 25 volts, the luminaires are controlled separately from *high-efficiency luminaires* and the luminaires are controlled by a dimmer or *automatic* control device.
2. Up to 50 percent of the total number of luminaires shall not be required to be *high-efficiency luminaires* where all of the following apply:

    1. The non-*high-efficiency luminaires* do not qualify for Exception 1.
    2. The non-*high efficiency luminaires* are controlled separately from *high-efficiency luminaires.*
    3. The non-*high efficiency luminaires* are controlled by a dimmer or *automatic* control device.

Revise definition as follows:

HIGH-EFFICIENCY ~~EFFICACY~~ ~~LAMPS~~ LUMINAIRES. Luminaires containing only compact fluorescent lamps, T-8 or smaller diameter fluorescent lamps with electronic ballasts, or lamps or light emitting diodes (LEDs) with a minimum efficacy of:

1. 60 lumens per watt for lamps over 40 watts,
2. 50 lumens per watt for lamps over 15 watts to 40 watts,
3. 40 lumens per watt for lamps 15 watts or less.

Reason: This proposal:

1. Increases the overall requirement for high-efficiency luminaires from 75% to 100% with certain exceptions designed to save energy and provide maximum flexibility to designers, owners and code officials.
2. Changes the Chapter 2 definitions from *high efficacy lamps* to *high efficiency luminaires* as determined by lamp efficacy. This means owners, designers, and building code officials would count luminaires (light fixtures) vs. counting light bulbs to determine the amount of high or low efficient lighting on a project. Luminaires often have multiple lamps, making counting more cumbersome for both the owner/designer as well as the code official. By counting luminaires, the code official simply has to identify lamp type, but doesn't have to count individual lamps within each luminaire.
3. Allows for an optional and more flexible energy savings approach for owners and designers by allowing up to 50% low efficiency luminaires as long as lighting controls are used to reduce or turn off the low efficiency luminaires.

    The current code requires 75% of lighting to be *high-efficacy.* However, there is a high amount of dissatisfaction with compact fluorescents because of their poor color, noise, incompatibility with dimming, and mercury content. (Reference, Dept. of Energy's "Compact Fluorescent Lighting in America: Lessons Learned on the Way to Market," prepared by Pacific Northwest National Laboratory, June 2006) LED technology is still emerging and many of the inexpensive LED's continue to have poor color and incompatibility with dimming.

    The most efficient light is the one that is off. The current code does not use lighting controls as a means of energy savings. Regardless of efficacy, light sources achieve maximum energy savings when they are off or reduced to the minimum required by the task. For 120 volt incandescent/halogen sources, dimming reduces energy use, increases lamp life, and dimmers are inexpensive. Automatic controls turn lighting off when not being used. (See reference documentation listed below.)

    Cost implications: In most cases, the required high efficiency Fluorescent and LED light fixtures are more expensive than their low efficiency 120 volt incandescent equivalents simply because fluorescent and LED have additional required components such as ballasts and drivers. Dimmers vary significantly in cost, but a 120v incandescent dimmer can be purchased for as little as $15. When installed with the less expensive 120v incandescent lighting, this combination can be less expensive than purchasing many fluorescent or LED versions controlled by a switch. There

are many options for owners and adding dimmers does not necessarily equal adding dollars when comparing low efficiency and high efficiency luminaires. Also, in residential, dimming is important for reasons other than energy savings and dimming fluorescent and LED sources can significantly increase dimming costs.
Residential is not commercial. In residences, it is very common for decorative lighting to be the main lighting source in a room. Decorative chandeliers are often only available in120v incandescent medium or candelabra based sockets. Often times these chandeliers exceed the current allowance (25%) even when using high efficacy light sources for other types of architectural lighting such as down lights, task lighting, etc. These fixtures do not qualify for the Low Voltage Exception currently in the code. The proposed Exception 2 gives a greater allowance for 120v incandescent/halogen luminaires than the current code allows to accommodate these decorative products, but encourages energy savings through the use of controls.

4. Clarifies the low voltage lighting exception currently in the code and adds stringency by requiring lighting controls as an energy savings approach for these light fixture types. The current code allows for the use of low voltage with no limits. They are lower in VOLTAGE not WATTAGE. Adding controls will increase the overall energy efficiency of these products.
5. Exception to C405.1 is meant to make residential dwelling units inside commercial construction buildings consistent with the residential section 404.1. There is no reason why different lighting efficiency standards should apply to multi-family residential than to single-family homes.

References

Several reports document savings from using controls residentially, such as:

- http://www.lrc.rpi.edu/programs/lightingTransformatio/economics/table2.asp [shows 20% to 40% savings depending on space type for using occupancy sensors]
- http://www.energy.ca.gov/title24/2013standards/prerulemaking/documents/current/Reports/Residential/Lighting/ open Residential Lighting PDF and see page 32 [shows 10% savings from dimmers, 30% savings from occupancy sensors]
- Heschong Mahone Group Lighting Efficiency Technology Report Vol. 1, see page 83. www.energy.ca.gov/efficiency/lighting/VOLUME01.PDF [shows 20% savings from dimmers and 54% savings from occupancy sensors]

Cost Impact: The code change proposal will not increase the cost of construction.

RE149-13

Public Hearing:	Committee:	AS	AM	D
	Assembly:	ASF	AMF	DF

R404.1-EC-FRANHOUSER.DOC

RE150-13
R202 (NEW) (IRC N1101.9 (NEW)), R404.1 (IRC N1104.1)

Proponent: Don Surrena, CBO, National Association of Home Builders (NAHB) (dsurrena@nahb.org)

Revise as follows:

R404.1 (N1104.1) Lighting equipment (Mandatory). ~~A minimum of seventy-five percent of the~~ Lamps in permanently installed lighting fixtures shall be high efficacy lamps ~~or a minimum of seventy-five percent of the permanently installed lighting fixtures shall contain only high efficacy lamps~~.

Exceptions:

1. Lamps in low-voltage lighting.
2. Lamps controlled by a dimmer or an *automatic control device*.
3. Lamps of 10 watts or less.
4. Lamps contained in appliances

Add new definition as follows:

AUTOMATIC CONTROL DEVICE. A device or system capable of automatically turning lighting loads off without manual intervention. Automatic control devices often include a feature for turning lights on manually.

Reason: Builder installed lighting represents roughly 7% of residential electricity use. This proposal has the potential to reduce household energy use by over 1%.
By requiring lamps (rather than fixtures) to be high efficacy, leaves open the ability for innovative new lighting technologies which can be used in a standard lighting base.
Durability of fixture ballasts is also a concern. Ballast repairs are not generally done by a consumer and will typically require an electrician replace the fixture at a significant cost increase to the consumer.

The new language is simpler, more enforceable and more stringent. It makes the code require 100% high efficacy lighting with an allowance for standard efficacy when special lighting controls are used.

Exceptions still maintain the stringency, but provide reasonable allowances for small lighting loads.

Cost Impact: The code change proposal will not increase the cost of construction.

RE150-13

Public Hearing:	Committee:	AS	AM	D
	Assembly:	ASF	AMF	DF

R404.1-EC-SURRENA.DOC

RE151-13
R404.2 (New) (IRC N1104.2 (NEW))

Proponent: Ellen Eggerton, representing Fairfax County, Virginia

Add new text as follows:

R404.2 (N1104.2) Electrical power use display. For dwelling units where the occupant is billed by the electric provider for electric used in the unit, an electrical energy monitoring device shall be installed on the electrical conductors serving the main electrical panel for each dwelling unit. The monitoring device shall be provided with a display indicating the current electrical energy consumption rate of the dwelling unit in kWh and the total electrical energy use of the dwelling unit in kW since the display device was last reset. The display shall be within 100 feet (64.5 m) distance of travel from the main electric panel for the dwelling unit.

Reason: This suggested change provides a homeowner real time electrical energy consumption and related cost information to make informed decisions on the operation of their home. Being able to monitor the energy consumption of plug, lighting and HVAC loads in real time provides immediate feedback information on their actions. The installation of sensors would be too difficult for homeowners but only a ten minute effort for the electrician when wiring the panel. The idea is that if people know exactly how much energy they are consuming and when, they can change old habits and reduce consumption.
The now popular dashboard display providing the miles per gallon rate in cars was a luxury feature and now is in many cars in response to interest by consumers to have useful energy consumption information.

Early adopters are buying individual plug monitors and only able to see the operation of individual appliance. But installing a whole-house sensor during building construction would provide better information and cost much less than sensors at each plug or appliance. Real time energy consumption information would be a very cost effective tool to get energy savings.

Cost Impact: In the current marketplace, the cost rate is about $80-120 per unit but with higher nationwide demand, the cost per unit could decrease.

RE151-13

Public Hearing:	Committee:	AS	AM	D
	Assembly:	ASF	AMF	DF

R404.1.1-EC-EGGERTON.DOC

RE152-13
R404.2 (NEW) (N1105.2 (NEW))

Proponent: Craig Conner, Building Quality, representing self (craig.conner@mac.com)

Add new text as follows:

R404.2 (N1105.2) Lamp efficacy. Lamps 5 watts or greater shall have a manufacturer's designation of efficacy.

Exception: Lamps less than 5 watts, UV lamps, black lights, bug lamps, germicidal lamps and lamps in appliances.

Reason: This requires a "manufacturer's designation" of efficacy on light bulb, light spec sheet, or packaging. Efficacy is a code requirement for lamps, but a hard value to find on many lamps. Without such a designation, how does the user of the lamp know the efficacy? How does one inspect for light efficacy?

Cost Impact: The code change proposal will not increase the cost of construction.

RE152-13

Public Hearing:	Committee:	AS	AM	D
	Assembly:	ASF	AMF	DF

R404.2-EC-CONNER.DOC

RE153-13
R405.2 (IRC N1105.2)

Proponent: Craig Conner, Building Quality, representing self (craig.conner@mac.com)

Revise as follows:

R405.2 (N1105.2) Mandatory requirements. Compliance with this section requires that the mandatory provisions identified in Section 401.2 be met. ~~All supply and return ducts not completely inside the building thermal envelope shall be insulated to a minimum of R-6.~~

Reason: Duct insulation is labeled both "prescriptive" in Section R403.2.1 and "mandatory" in R405.2. It can't be both.

Cost Impact: The code change proposal will not increase the cost of construction.

RE153-13

Public Hearing:	Committee:	AS	AM	D
	Assembly:	ASF	AMF	DF

R405.2-EC-CONNER.DOC

RE154-13
R405.2 (IRC N1105.2), R405.2.1 (NEW) (IRC N1105.2.1 (NEW))

Proponent: Robby Schwarz, EnergyLogic Inc., representing EnergyLogic, Inc. (robby@nrglogic.com)

Revise as follows:

R405.2 (N1105.2) Mandatory requirements. Compliance with this section requires that the mandatory provisions identified in Section R401.2 be met. All supply and return ducts not completely inside the *building thermal envelope* shall be insulated to a minimum of ~~R-6~~ R-8. Ductwork, that is either partially or completely within the thermal layer of the wall system of the *building thermal envelope,* shall have insulation of a *R-value* of not less than R-10 on the side of the duct that is away from the conditioned space. Where the duct is in a wall cavity and the R-10 insulation does not completely fill the cavity, the remaining cavity space shall be filled with insulation to the extent that the requirement for insulating the exterior wall of the building is met or the cavity space is completely filled, whichever is less. Ductwork, that is either partially or completely within the thermal layer of a floor system of the *building thermal envelope,* shall have insulation of a *R-value* of not less than R-19 on the side of the duct that is away from the conditioned space. Floor cavity insulation shall be installed in accordance with Section R402.2.7. Where the duct is in a floor cavity and the R-19 insulation does not completely fill the cavity, the remaining cavity space shall be filled with insulation to the extent that the requirement for insulating the floor system of the building is met or the cavity space is completely filled, whichever is less.

R405.2.1 (N1105.2.1) In process inspection requirement. Inspections of the code-required energy specifications documented in the simulated performance code-compliance reports shall be verified to demonstrate that the as-built conditions meet or exceed the specified parameters used for the code-compliance reports. The entity or persons who performed the analysis shall perform the inspections or where *approved*, other *approved* entities or persons shall perform the inspection.

Reason: Field inspection, in order to create an accurate computer generated energy analysis, should be required for following reasons:

1. For production building, a plan is often mastered and that one plan may be built over 100 times. To ensure that each house meets the performance analysis, each home must be inspected.
2. Computer generated energy analyses utilize worst case configuration of the proposed design and requires evaluations and inputs that must be confirmed in the specific home that is built to ultimately determine if the actually built home meets the intent of the energy code. Examples of this are worst case air leakage and duct leakage numbers but also orientation, window square footage, number of bedrooms and foundation type.
3. The reality is that houses built from a set of plans change. The actual built home may generally reflect the homes plans but window square footage, orientation, and even insulation and mechanical equipment are often different from what was proposed. The inspection process ensures that the energy analysis is addressed and site specific which ultimately ensures that the home that received its permit from the proposed design's energy analysis has carried out what they have proposed, which is to meet the intent of the code, even if each component of the home is not exactly the same as what was on the set of plans.

Cost Impact: On a national basis there could be a cost impact as most jurisdiction's would allow third party inspections and not do the energy analysis themselves. However, this is one of many code compliance pathways the builder may choose and it is important that the builder realize that when this option is chosen that they in essence are locking themselves into a code compliance path that requires energy analysis and inspection. In Colorado, many builders utilize this path and are seeing value due to increased quality assurance, consistency across jurisdictional boundaries in a home rule state, and measured quantification of compliance.

RE154-13

Public Hearing:	Committee:	AS	AM	D
	Assembly:	ASF	AMF	DF

R405.2-EC-SCHWARZ.DOC

RE155-13
R405.3 (IRC N1105.3)

Proponent: Craig Conner, Building Quality, representing self (craig.conner@mac.com)

Revise as follows:

R405.3 (N1105.3) Performance-based compliance. Compliance based on simulated energy use performance requires that a proposed residence (*proposed design*) be shown to have an annual energy ~~cost~~ use that is less than or equal to the annual energy ~~cost~~ use of the *standard reference design*. To equate electricity with other fuels, the electricity use shall be multiplied by 2.9.

Compliance based on energy cost shall be permitted. Energy prices shall be taken from an *approved* source approved by the code official, such as the Department of Energy, Energy Information Administration's State Energy Price and Expenditure Report. Code officials shall be permitted to require time-of-use pricing in energy cost calculations.

> ~~**Exception:** The energy use based on source energy expressed in Btu or Btu per square foot of conditioned floor area shall be permitted to be substituted for the energy cost. The source energy multiplier for electricity shall be 3.16. The source energy multiplier for fuels other than electricity shall be 1.1.~~

Reason. Energy costs change over time. Using a specific value means any calculation will remain constant. This makes the constant value the main metric, but allows energy costs, just the reverse of the current. The multiplier, 2.9, is the result of 3.16 divided by 1.1.

Cost Impact: The code change proposal will not increase the cost of construction.

RE155-13

Public Hearing:	Committee:	AS	AM	D
	Assembly:	ASF	AMF	DF

R405.3 #1-EC-CONNER.DOC

RE156-13
R405.3 (New) (IRC N1105.3 (New))

Proponent: Craig Conner, Building Quality, representing self (craig.conner@mac.com)

Add new text as follows:

R405.3 (N1105.3) Additional performance options. Where *approved*, performance calculations shall include the impact of controls and energy distribution systems provided that such controls and systems are a physical part of the building. Performance calculations shall consider only energy use within the scope of this code. The calculations shall not consider occupant behavior changes or switching between fossil and electric fuels.

Reason: As the thermal shell and equipment get more efficient, more of the remaining efficiency will be found in control systems for energy use devices and in the distribution systems for air and water. This establishes a broad principal that permits, but does not require, consideration of a variety of elements that may contribute to the energy efficiency of a residence.

Cost Impact: The code change proposal will not increase the cost of construction.

RE156-13

Public Hearing:	Committee:	AS	AM	D
	Assembly:	ASF	AMF	DF

R405.3 #2-EC-CONNER.DOC

RE157-13
R405.3 (IRC N1105.3)

Proponent: Brian Dean, Energy Efficient Codes Coalition; Garrett Stone, Brickfield Burchette Ritts & Stone, PC; Jeff Harris, Alliance to Save Energy; Harry Misuriello, American Council for an Energy-Efficient Economy; and Bill Prindle, Energy Efficient Codes Coalition.

Revise as follows:

R405.3 (N1105.3) Performance-based compliance. Compliance based on simulated energy performance requires that a proposed residence (*proposed design*) be shown to have an ~~annual~~ energy cost over a 30 year useful life of the building, on a present value basis, that is less than or equal to the ~~annual~~ energy cost over a 30 year useful life of the building, on a present value basis, of the *standard reference design*. Improvements in energy efficiency in the *proposed design* over the *standard reference design* shall be assumed to revert to the *standard reference design* at the end of the useful life of the improvement. Energy prices, energy price escalation rates, discount rates, the useful life of specific building features and components including installed energy efficiency measures in the building and all other necessary assumptions for the analysis shall be taken from ~~a~~ *approved* sources. ~~*approved* by the *code official*, such as the Department of Energy, Energy Information Administration's *State Energy Price and Expenditure Report*~~. *Code officials* shall be permitted to require time-of-use pricing in energy cost calculations.

> **Exception:** The energy use based on source energy expressed in Btu or Btu per square foot of *conditioned floor area* shall be permitted to be substituted for the energy cost. The source energy multiplier for electricity shall be 3.16. The source energy multiplier for fuels other than electricity shall be 1.1.

Reason: The purpose of this code change is to improve the efficiency of buildings by modifying the methodology to incorporate useful life and present value concepts for calculating energy cost under the Section R405 Simulated Performance Alternative. The current section R405.3 calculates the annual energy cost in the first year of a proposed new home and compares it against a baseline Standard Reference Design home to determine compliance. A major problem with this approach is the comparison of energy cost only in the first year. The home is designed to last for many years and over such period energy costs will change and various components of the home and energy efficiency measures will be required to be replaced due to shorter useful lives. This fact is recognized in the Intent of the IECC, Section R101.3 which is directed at regulating "the design and construction of buildings for the effective use and conservation of energy over the useful life of each building."

A more sophisticated analysis would account for these changes over time. The proposed change is intended to require this more sophisticated analysis. Specifically, the proposed changes require:

- the use of a 30-year useful building life;
- energy costs to be escalated over time;
- incorporation of the useful life of each feature of the building constituting an energy efficiency improvement over the standard reference design, by requiring that the analysis assume that the feature revert to the standard reference design at the end of its useful life;
- the use of the present value of energy costs for comparison purposes; and the assumptions for the analysis be derived from a source approved by the code official.

Cost Impact: The code change proposal will not increase the cost of construction.

RE157-13

Public Hearing:	Committee:	AS	AM	D
	Assembly:	ASF	AMF	DF

R405.3-EC-DEAN-HARRIS-MISURIELLO-PRINDLE-STONE.DOC

RE158-13
R405.3 (IRC N1105.3)

Proponent: Keith Dennis, P.E., National Rural Electric Cooperative Association (NRECA) representing NRECA. (Keith.Dennis@nreca.coop)

Revise as follows:

R405.3 (N1105.3) Performance-based compliance. Compliance based on simulated energy performance requires that a proposed residence *(proposed design)* be shown to have an annual energy cost that is less than or equal to the annual energy cost of the *standard reference design.* Energy prices shall be taken from a source *approved* by the *code official,* such as the Department of Energy, Energy Information Administration's *State Energy Price and Expenditure Report. Code officials* shall be permitted to require time-of-use-pricing in energy cost calculations.

> **Exception:** The energy use based on site or source energy expressed in Btu or Btu per square foot of *conditioned floor area* shall be permitted to be substituted for the energy cost. The source energy multiplier for electricity shall be 1.89 ~~3.16~~. The source energy multiplier for fuels other than electricity shall be 1.1.

Reason: This revision provides more flexibility for code officials, and updates the energy source multiplier for electricity to a more current number developed by DOE for appliance energy efficiency standards for 2015 in recent rulemakings (for dishwashers and furnace fans) in Technical Support Documents. The current code includes an outdated factor and does not allow the ability to use site energy, which is the metric that can best be directly affected during construction. The inclusion of site energy would not be setting any precedents. Site energy was originally allowed in this exception and used by code officials. Unfortunately, it was removed in 2009. (See the following sources):

Furnace Fan Technical Support Document, June 2012:

http://www1.eere.energy.gov/buildings/appliance_standards/rulemaking.aspx/ruleid/41

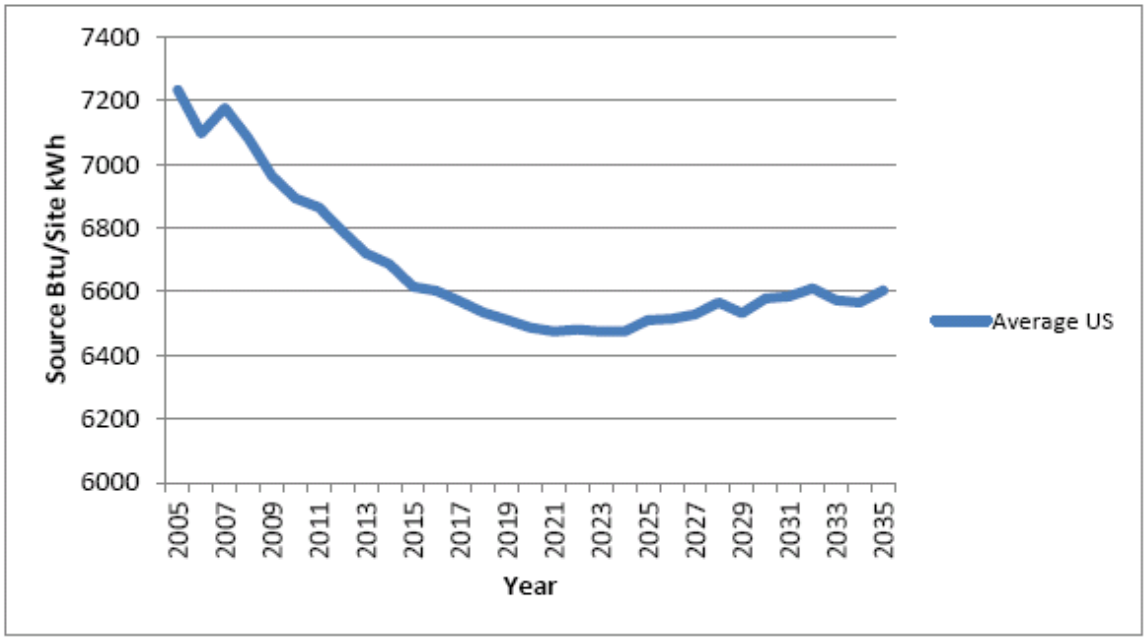

Figure 10.3.1 Site-to-Source Conversion Factors for Electricity

Dishwasher Technical Support Document, May 2012

http://www1.eere.energy.gov/buildings/appliance_standards/product.aspx/productid/67

Table 10.3.3 Site-to-Source Conversion Factors for Electricity and Natural Gas

Year	Electricity Btu/kWh	Natural Gas Btu/Btu	Year	Electricity Btu/kWh	Natural Gas Btu/Btu
2010	7,009	1.07	2023	6,506	1.07
2011	6,827	1.07	2024	6,534	1.07
2012	6,651	1.07	2025	6,534	1.07
2013	6,549	1.07	2026	6,538	1.07
2014	6,486	1.07	2027	6,552	1.07
2015	6,448	1.07	2028	6,555	1.07
2016	6,443	1.07	2029	6,551	1.07
2017	6,433	1.07	2030	6,548	1.07
2018	6,427	1.07	2031	6552	1.07
2019	6,425	1.07	2032	6,551	1.07
2020	6,436	1.07	2033	6,548	1.07
2021	6,468	1.07	2034	6,550	1.07
2022	6,483	1.07	2035–2047	6,561	1.07

Source: NEMS, 2011.

Using the 2015 value, 6,448 Btu / 3,413 Btu/kWh = 1.889246997 = 1.89

Cost Impact: The code change proposal will not increase the cost of construction. There is no cost impact to updating the source energy multiplier for electricity and increasing flexibility.

RE158-13

Public Hearing:	Committee:	AS	AM	D
	Assembly:	ASF	AMF	DF

R405.3-EC-DENNIS.DOC

RE159-13
R405.3 (IRC N1105.3)

Proponent: Chuck Foster, Foster and Jamison representing self (cfoster20187@yahoo.com)

Revise as follows:

R405.3 (N1105.3) Performance-based compliance. Compliance based on simulated energy performance requires that a proposed residence *(proposed design)* be shown to have an annual energy cost that is less than or equal to the annual energy cost of the *standard reference design.* Energy prices shall be taken from a source *approved* by the *code official,* such as the Department of Energy, Energy Information Administration's *State Energy Price and Expenditure Report. Code officials* shall be permitted to require time-of-use-pricing in energy cost calculations.

> **Exception:** ~~The~~ Energy use based on source energy expressed in total annual Btu's or annual Btu's per square foot of *conditioned floor area* shall be permitted to be substituted for ~~the~~ energy cost. The source energy multiplier for electricity shall be ~~3.16~~ 1.89. The source energy multiplier for fuels other than electricity shall be 1.1.

Reason: This code proposal changes the source energy multiplier for electricity from its existing value of 3.16 Btu's to 1.89 Btu's. It also clarifies that the Btu or Btu/square foot value should be estimated on an annual basis.

While there are several jurisdictions in the United States that use source energy as the basis of their energy codes, the overwhelming majority use either site energy or cost. This exception (in R405.3) was originally offered to accommodate those few jurisdictions that have chosen to use source energy.

One of the challenges for use of source energy in codes is that the relationship between site and "source energy" consumption is not well defined. For instance, the 3.16 value currently in the code assumes that electricity produced from wind, solar, hydro and other forms of renewable energy is equivalent to the consumption of fossil fuels. The same assumption holds for electricity derived from nuclear energy. Thus, from a source energy perspective an unbiased observer would be relatively indifferent between choosing electricity from 100% renewable sources (wind or hydro for instance) and diesel, fuel oil, or gas. This outcome does not seem helpful.

In addition, the mix of sources for the production of electricity (wind, solar, hydro, nuclear, coal, oil, gas, geothermal, etc.) changes – and will continue to change dramatically going into the future with the proliferation of additional renewable energy resources (especially wind) into the national mix. Even if the 3.16 source energy multiplier was a good number when it was originally adopted (something this proposal disagrees with as argued above), it is surely not still valid.

Finally, it is important to recognize that the impact of the IECC will be realized in the future – codes considered today will have marketplace impacts starting in 2015 so looking at electric source energy multipliers today (2013) that are based on data from 2011 (or earlier) for use in 2015 (or later) is likely to convey to users inaccurate pictures of actual resource impacts.

The U.S. Department of Energy recognized this time lag problem in a recent rulemaking. Per Federal legislation, DOE makes appliance efficiency standards for many residential and commercial products like water heaters and furnaces based on *site* energy consumption.

In addition, however, DOE *estimates* the *source* energy impacts based on data prepared by the Energy Information Agency. In a rulemaking in 2012 on dishwashers, DOE used EIA generation data for the year 2015 going forward as it explained the marketplace impact would be observed in the future and use of current (or past) electric generation data would not be appropriate.

Specifically, DOE used the value of 1.89 for a source energy multiplier in 2015 and this proposal would adopt for the IECC the same source energy value used by DOE. (Dishwasher Technical Support Document, May 2012 http://www1.eere.energy.gov/buildings/appliance_standards/product.aspx/productid/67)

Cost Impact: This proposed code change proposal will not increase the cost of construction. There is no cost impact to increasing flexibility in the performance path.

RE159-13

Public Hearing:	Committee:	AS	AM	D
	Assembly:	ASF	AMF	DF

R405.3-EC-FOSTER.DOC

RE160-13
R405.3 (IRC N1105.3)

Proponent: Steve Rosenstock, Edison Electric Institute, representing Edison Electric Institute (srosenstock@eei.org)

Revise as follows:

R405.3 (N1105.3) Performance-based compliance. Compliance based on simulated energy performance requires that a proposed residence *(proposed design)* be shown to have an annual energy cost that is less than or equal to the annual energy cost of the *standard reference design.* Energy prices shall be taken from a source *approved* by the *code official,* such as the Department of Energy, Energy Information Administration's *State Energy Price and Expenditure Report. Code officials* shall be permitted to require time-of-use-pricing in energy cost calculations.

> **Exception:** The energy use based on site or source energy expressed in Btu or Btu per square foot of *conditioned floor area* shall be permitted to be substituted for the energy cost. The source energy multipliers shall be determined by the *code official*. ~~for electricity shall be 3.16. The source energy multiplier for fuels other than electricity shall be 1.1~~.

Reason: This proposal will make the provision more flexible for building designers, building owners, and code officials.

Part I: Site Energy

Site energy was part of the exception for many years until it was recently removed. There are many reasons to allow site energy to be used instead of energy costs:

1) Site energy is an actual metric that can be measured and verified by code officials, while source energy is an estimate.
2) Site energy information is credible, as it is shown on customers' energy bills on a monthly basis and used in other consensus-based code documents, such as ASHRAE 90.1, ASHRAE 90.2, and ICC-700 use site energy metrics for efficiency requirements.
3) DOE uses site energy information in many of its energy efficiency and energy consumption publications, such as the Residential Energy Consumption Survey. DOE uses site energy for its appliance energy efficiency standards program and the FTC uses site energy on the yellow EnergyGuide labels found on consumer appliances. EPA uses site energy to determine if an appliance or home qualifies for the Energy Star program.
4) Site energy is reliable, since it can be measured by utilities, consumers, and independent 3rd parties. In terms of energy efficiency upgrades, consumers rely on site energy information (amount used by older appliance or equipment compared to new appliance or equipment) to help them make energy efficiency decisions.
5) Site energy is replicable, as the units of measurement (kWh, therms, gallons, Btu's) can be used throughout the United States and are familiar to consumers on their monthly energy bills. Source energy is not replicable, as different estimates must be used for different energy sources, and different entities can make different assumptions about upstream production and delivery of different energy sources.
6) Site energy is transparent and easy to understand. It can be based on meter readings or DOE test procedures or FTC EnergyGuide labels or Energy Star labels. It is the metric that allows people to easily compare energy efficiency options in the marketplace. It is the metric that allows people to make good economic choices when faced with competitive alternatives.

Part II – Revision of Source Energy Estimates

There are many ways to estimate upstream energy losses. The energy production industry is very dynamic and subject to significant changes. In the United States in 2012 and 2013, there was and will be record amounts of natural gas produced from hydraulic fracturing production techniques. In 2012 and 2013, there will be record amounts of oil produced and imported from oil sands production. In 2012, there was a record amount of electricity produced from renewable forms of energy and a record amount of electricity produced by combined-cycle natural gas turbines.

The values that are currently shown should be deleted and not used for the following reasons:

1) The values shown are not consistent with values shown in other published documents.

Many documents and articles have been published over the past several years with source energy estimates. Among them are:

National Renewable Energy Laboratory NREL/TP-550-38617 "Source Energy and Emission Factors for Energy Use in Buildings" (June 2007)

American Gas Association EA 2009-3 “A Comparison of Energy Use, Operating Costs, and Carbon Dioxide Emissions of Home Appliances” (October 2009)

Environmental Protection Agency “Energy Star Performance Ratings Methodology for Incorporating Source Energy Use” (August 2009)

National Renewable Energy Laboratory NREL/TP-550-47246 “Building America Research Benchmark Definition” (January 2010)

International Code Council “International Green Construction Code” (March 2012)

U.S. Department of Energy Residential Dishwasher Energy Efficiency Technical Support Document, May 2012: http://www1.eere.energy.gov/buildings/appliance_standards/product.aspx/productid/67

U.S. Department of Energy Residential Furnace Fan Technical Support Document, June 2012: http://www1.eere.energy.gov/buildings/appliance_standards/rulemaking.aspx/ruleid/41

The values in the IECC do not match and cannot be substantiated with any of these published documents.

2) Different fossil fuels have different upstream source estimates.

In the IECC, all fossil fuels are assumed to have the same multiplier. In other documents, there is a large variation in the upstream estimates that will have a significant impact on energy performance results. As one example, for fuel oil and propane, EPA Portfolio Manager uses a factor of 1.01 for both, while NREL used estimated values of 1.158 and 1.151.

3) The use of 3.16 for electricity is overstated for many parts of the United States and does not account for significant regional differences or the increase in the use of renewable power generation and combined cycle gas turbines.

In other publications and web sites, the estimates for electricity are shown on a national basis, a regional basis, or a state by state basis. This is due to the variety of electric generation techniques which have upstream energy losses that can vary by orders of magnitude based on local conditions, regional conditions, physical location, season, month, week, or day, as well as hourly fluctuations in the amount of sunlight or wind speed.

In the IGCC Table 602.1.2.1, there are 26 values shown for electricity, based on the power pool sub-region in which a building is located. The values in the IGCC table (which are based on outdated 2005 electric generation data) range from 1.76 to 3.82. Using the value of 3.16 will overstate the source estimate for electricity in 18 (or 69.2%) of the 26 power pool sub-regions shown in the table (that uses 2005 data). Using 2011 or 2012 data would show that the current values is more overstated for the 18 regions and likely to be overstated for other regions as well.

In summary, this code change will allow the code official to use the most recent data for current or projected source energy estimates, rather than use static and outdated values that do not correspond to the rapidly changing nature of energy production in the United States, and worldwide.

Cost Impact: This proposed code change proposal will not increase the cost of construction. There is no cost impact to increasing flexibility in the performance path.

RE160-13

Public Hearing:	Committee:	AS	AM	D
	Assembly:	ASF	AMF	DF

R405.3-EC-ROSENSTOCK.DOC

RE161-13
R405.3 (IRC N1105.3), Chapter 5

Proponent: Robby Schwarz EnergyLogic Inc. representing EnergyLogic, Inc. (robby@nrglogic.com)

Revise as follows:

R405.3 (N1105.3) Performance-based compliance. Compliance based on simulated energy performance requires that a proposed residence *proposed design* be shown to have an annual energy cost that is less than or equal to the annual energy cost of the *standard reference design.* Energy prices shall be taken from a source *approved* by the *code official,* such as the Department of Energy, Energy Information Administration's *State Energy Price and Expenditure Report. Code officials* shall be permitted to require time-of-use pricing in energy cost calculations.

Exceptions:

1. The energy use based on source energy expressed in Btu or Btu per square foot of *conditioned floor area* shall be permitted to be substituted for the energy cost. The source energy multiplier for electricity shall be 3.16. The source energy multiplier for fuels other than electricity shall be 1.1.
2. Compliance shall be based on comparative analyses between the *proposed design* and the *standard reference design* using scoring generated by RESNET Mortgage Industry National Home Energy Rating Standards. The *proposed design* shall comply with the code where the score of the *proposed design* is less than or equal to the score of the *standard reference design* provided that the analyses use identical geometry and the energy efficiency features for the *standard reference design* in Table R405.5.2(1) are used for the *standard reference design* analysis.

Add new standard to Chapter 5 as follows:

RESNET Residential Energy Services Network, Inc.
P.O. Box 4561
Oceanside, CA 92052-4561

RESNET Standards-2013 RESNET Mortgage Industry National Home Energy Rating Standards.

Reason: The current annual energy cost matrix for demonstrating code compliance is flawed and may demonstrate that a house that should pass the energy code, based on actual geometry and energy specifications, may not only because the energy costs in a region have changed. More and more jurisdiction and builders across the country are turning to performance scores to represent the efficiency of a home and to demonstrate code compliance. Performance scores in and of themselves do not necessarily demonstrate code compliance. However, if the score is imposed on the existing structure of the code as Exception #2 does, the score can reflect code compliance simply as a means of demonstrating passing and failing.

The current structure of the simulated performance path requires that the mandatory sections of the IECC be complied with, thus ensuring that house performance is maintained and that the score is only a measure to demonstrate compliance. In addition, exception #2 utilizes the code reference home as described in table 405.5.2(1) and therefore energy code compliance utilizing this pathway will have a score that is variable for each qualified home. This is accomplished through the 2015 IECC Reference Design outlined in table 405.5.2(1). When the builders proposed designed home is configured with the IECC reference design features and modeled using approved software, the resulting score becomes the basis for the performance score target for that home.
The EPA Energy Star program and the DOE Challenge Home program utilize this same matrix for demonstrating qualification for their programs and have demonstrated that the compliance path described in exception #2 will set the score target for the performance path equal to the performance that would be achieved if the prescriptive path was followed for each individual home. In this way jurisdictions can avoid developing a fixed value, or performance score, which really has no bearing on compliance and instead set the score threshold required for energy code compliance at the same value that the same house would earn if configured to the IECC prescriptive path, as outlined in table 405.5.2(1) Reference Design.

** Footnote to Energy Star and DOE Challenge Home program documents

Cost Impact: The code change proposal will not increase the cost of construction.

Analysis: A review of the standards proposed for inclusion in the code, RESNET Standards, with regard to the ICC criteria for referenced standards (Section 3.6 of CP#28) will be posted on the ICC website on or before April 1, 2013.

RE161-13

Public Hearing:	Committee:	AS	AM	D
	Assembly:	ASF	AMF	DF

R405.3-EC-SCHWARZ.DOC

RE162-13
R405.4 (NEW) (IRC N1105.4 (NEW))

Proponent: Craig Conner, Building Quality, representing self (craig.conner@mac.com)

Add new text as follows:

R405.4 (N1105.4) Renewable energy. On-site energy production from renewables and waste shall be treated as a reduction in energy use. This includes, but is not limited to, photovoltaic and solar hot water systems that are standalone or integrated into the building, as well as renewable energy located on or adjacent to the building site. Both energy generated for use on the building site and energy sent back to the energy supply system shall be considered reductions in energy use.

Reason: This provides a mechanism for treating renewable energy generated at residences as an energy savings for that residence.

Cost Impact: The code change proposal will not increase the cost of construction.

RE162-13

Public Hearing:	Committee:	AS	AM	D
	Assembly:	ASF	AMF	DF

R405.4-EC-CONNER.DOC

RE163-13

R405.4.2 (IRC N1105.4.2), R405.4.2.1 (NEW) (IRC N1105.4.2.1 (NEW)), R405.2.2 (NEW) (IRC N1105.4.2.2 (NEW))

Proponent: Robby Schwarz EnergyLogic Inc., representing EnergyLogic, Inc. (robby@nrglogic.com)

Revise as follows:

R405.4.2 (N1105.4.2) Compliance report. Compliance software tools shall generate a report that documents that the *proposed design* complies with Section R405.3. A compliance report on the *proposed design* shall be submitted with the application for the building permit. Upon completion of the building, a compliance report based upon the as-built condition of the building, shall be submitted to the *code official* before a certificate of occupancy is issued by the *code official*. Batch sampling of buildings to determine energy code compliance for all buildings in the batch shall be prohibited.

Compliance reports shall include information in accordance with Sections R405.4.2.1 and R405.4.2.2. ~~The compliance documentation shall include the following information:~~ Where the *proposed design* of a building could be built on different sites where the cardinal orientation of the building on each site is different, compliance of the *proposed design* for the purposes of the application for the building permit, shall be based upon the worst case orientation, worst case configuration, worst case building air leakage and worse case duct leakage. Such worse case parameters shall be used as inputs to the compliance software for energy analysis.

~~1. Address or other identification of the residence;~~
~~2. An inspection checklist documenting the building component characteristics of the *proposed design* as listed in Table R405.5.2(1). The inspection checklist shall show results for both the *standard reference design* and the *proposed design*, and shall document all inputs entered by the user necessary to reproduce the results;~~
~~3. Name of individual completing the compliance report; and~~
~~4. Name and version of the compliance software tool.~~

R405.4.2.1 (N1105.4.2.1) Compliance report for permit application. A compliance report submitted with the application for building permit shall include all of the following:

1. Building street address, or other building site identification.
2. A statement indicating that the *proposed design* complies with Section R405.3.
3. An inspection checklist documenting the building component characteristics of the *proposed design* as indicated in Table R405.5.2(1). The inspection checklist shall show results for both the *standard reference design* and the *proposed design* with all user inputs to the compliance software to generate the results.
4. A site-specific energy analysis report that is in compliance with Section R405.3
5. Name of the individual performing the analysis and generating the report.
6. Name and version of the compliance software tool.

R405.4.2.2 (N1105.4.2.2) Compliance report for certificate of occupancy. A compliance report submitted for obtaining the certificate of occupancy shall include all of the following:

1. Building street address, or other building site identification
2. A statement indicating that the as-built building complies with Section R405.3.
3. A certificate indicating that the building passes the performance matrix for code compliance and the energy saving features of the buildings.
4. A site-specific energy analysis report that is in compliance with Section R405.3.
5. Name of the individual performing the analysis and generating the report.

6. Name and version of the compliance software tool.

~~**Exception:** Multiple orientations. When an otherwise identical building model is offered in multiple orientations, compliance for any orientation shall be permitted by documenting that the building meets the performance requirements~~

Reason: Jurisdictions, Builders, third party inspection companies and others are not clear of the process for completing and utilizing the simulated performance path. With all pathways through the energy code one must in essence declare how they will meet the intent of the code. For the prescriptive path they simply say they are going prescriptive, for the UA trade off path they submit a document such as a RESCheck report, and for the simulated performance path they must currently submit a document demonstrating that the annual energy cost of the proposed design are less than or equal to the same home if it were built with the reference design specification. It becomes unclear how one demonstrates that they have carried out their proposed design. The revisions proposed for this section clearly outlines a process by which the proposed design is submitted, inspections take place, and additional analysis is preformed to ensure that the proposed design was achieved or bettered for the purposes of compliance.

Cost Impact: The code change proposal will not increase the cost of construction.

RE163-13

Public Hearing:	Committee:	AS	AM	D
	Assembly:	ASF	AMF	DF

R405.4.2-EC-SCHWARZ.DOC

RE164-13

Table R405.5.2(1) (IRC Table N1105.5.2(1))

Proponent: Craig Conner, Building Quality, representing self (craig.conner@mac.com)

Revise as follows:

TABLE R405.5.2(1) (N1105.5.2(1))
SPECIFICATIONS FOR THE STANDARD REFERENCE AND PROPOSED DESIGNS

BUILDING COMPONENT	STANDARD REFERENCE DESIGN	PROPOSED DESIGN
Glazing[a]	~~Total area[b] =~~ ~~(a) The proposed glazing area; where proposed glazing area is less than 15% of the conditioned floor area.~~ ~~(b) 15% of the conditioned floor area; where the proposed glazing area is 15% or more of the conditioned floor area.~~ As proposed Orientation: equally distributed to four cardinal compass orientations (N, E, S & W). *U*-factor: from Table R402.1.3 SHGC: From Table R402.1.1 except that for climates with no requirement (NR) SHGC = 0.40 shall be used. Interior shade fraction: 0.92-(0.21 × SHGC for the standard reference design) External shading: none	As proposed As proposed As proposed As proposed 0.92-(0.21 × SHGC as proposed) As proposed

For SI: 1 square foot = 0.93 m^2, 1 British thermal unit = 1055 J, 1 pound per square foot = 4.88 kg/m^2, 1 gallon (U.S.) = 3.785 L, °C = (°F-3)/1.8, 1 degree = 0.79 rad.

(Portions of Table not shown remain unchanged)

a. Glazing shall be defined as sunlight-transmitting fenestration, including the area of sash, curbing or other framing elements, that enclose conditioned space. Glazing includes the area of sunlight-transmitting fenestration assemblies in walls bounding conditioned basements. For doors where the sunlight-transmitting opening is less than 50 percent of the door area, the glazing area is the sunlight transmitting opening area. For all other doors, the glazing area is the rough frame opening area for the door including the door and the frame.

b. ~~For residences with conditioned basements, R-2 and R-4 residences and townhouses, the following formula shall be used to determine glazing area:~~

~~$AF = A_s \times FA \times F$~~

~~where:~~

~~AF = Total glazing area.~~

~~A_s = Standard reference design total glazing area.~~

~~FA = (Above-grade thermal boundary gross wall area)/(above-grade boundary wall area + 0.5 × below-grade boundary wall area).~~

~~F = (Above-grade thermal boundary wall area)/(above-grade thermal boundary wall area + common wall area) or 0.56, whichever is greater.~~

~~and where:~~

~~Thermal boundary wall is any wall that separates conditioned space from unconditioned space or ambient conditions.~~

~~Above-grade thermal boundary wall is any thermal boundary wall component not in contact with soil.~~

~~Below-grade boundary wall is any thermal boundary wall in soil contact.~~

~~Common wall area is the area of walls shared with an adjoining dwelling unit.~~

~~L and CFA are in the same units.~~

Reason: The principals should be: Keep it simple. Keep it energy efficient. Simple is setting a specific window requirement and having it apply to the whole performance approach, as is done in the prescriptive approach. Simple is presuming that the glass area

for the performance calculation is the same as the glass area in the proposed new home. Simple is removing unneeded calculations. This change also has the effect of allowing changes from plans to the home as constructed without recalculation.

As windows get more efficient, the window area matters less. In some situations more glass better. In northern climates windows at the edge of what is now in the market may be as good as a “normal” wall. Therefore the impact of window area is decreased and not worth the calculation.

Removal of the window area calculation was the major simplification in the 2003 IECC simplification needed to get to the 2006 IECC. The 2006 IECC simply says use as much window as you want, just make it energy efficient windows. Requiring a specific window for each climate zone created huge markets for those specific levels of efficiency. Window makers respond by making a energy efficient windows a commodity, with a significant fall in the cost for energy efficient windows. The effect has been so strong that the building code has repeatedly pushed Energy Star to move to new levels.

Cost Impact: The code change proposal will not increase the cost of construction.

RE164-13

Public Hearing:	Committee:	AS	AM	D
	Assembly:	ASF	AMF	DF

R405.5.2(1)T #1-EC-CONNER.DOC

RE165-13

202 (NEW) (IRC N1101.9 (NEW)), Table R405.5.2(1) (IRC Table N1105.5.2(1))

Proponent: Gary MacFadden, National Electrical Manufacturers Association (NEMA) (gary.macfadden@Nema.org)

Revise as follows:

TABLE R405.5.2(1) (N1105.5.2(1))
SPECIFICATIONS FOR THE STANDARD REFERENCE AND PROPOSED DESIGNS

BUILDING COMPONENT	STANDARD REFERENCE DESIGN	PROPOSED DESIGN
Heating systems[f, g]	As proposed for other than electric heating without a heat pump. Where a proposed design utilizes grid-interactive electric thermal storage, the standard reference design shall be as proposed. Where the proposed ~~design utilizes electric heating without a heat pump~~ electric heating design does not utilize a heat pump or grid-interactive electric thermal storage, the standard reference design shall be an air source heat pump in accordance with Section C403 of the International Energy Conservation Code. Capacity: sized in accordance with Section R403.6	As proposed

(Portions of Table not shown remain unchanged)

Add new definition as follows:

GRID-INTERACTIVE ELECTRIC THERMAL STORAGE (ETS). A device designed for the storage of electrical energy that has been converted into heat, and that has the ability to turn on or off in response to the needs of the utility or the electric grid.

Reason: As it is written, Table R405.5.2(1) requires a modeler to assume a heat pump system whenever a designer proposes to use "… other than electric heating without a heat pump," *i.e.*, electric resistance or electric radiant heating in a new residence. While perhaps serving a valuable function in some fashion in the past (elimination of gaming where a modeler assumes an electric furnace for the reference house and then proposes a heat pump allowing a less stringent envelope), the limitation on use of ERH in the modeling is overly restrictive, particularly as it relates to Grid-interactive electric thermal storage ("ETS"). The definition is being added because the IECC does not currently have a definition for grid-interactive electric thermal storage.

Substantiation: ETS systems have significantly different operational and energy consumption characteristics versus other types of heating systems. These differences are at the core of the rationale behind this code change proposal. In particular, ETS systems have the ability to respond to the needs of the utility and electric grid by storing energy during preferential times of the day or night and turn on or off as needed. This is very beneficial in improving efficiency of power generation, transmission and distribution, for integration of renewable energy and for providing grid power balancing services. Unfortunately, ETS systems are generally lumped together with traditional heating systems (as they are in the existing code language).

Language like that found currently in Table R405.5.2(1) that requires a modeler to assume a heat pump in the reference house, even if the designer intends to use electric resistance heating, including an ETS in the proposed house, has been in the IECC for many years. The justification cited historically for that modeling limitation is:

- That modelers will game the system by assuming ERH in the reference house but a heat pump in the proposed house, thereby allowing a less stringent envelope, and/or

- That a heat pump will consume on the order of half the energy of an electric furnace installed in the same house so the code should discourage designers from specifying ERH and instead should specify a heat pump.

With respect to the former of these justifications, the current language requiring the same equipment to be modeled in both the reference and the proposed designs denies any opportunity to game the system as described above.

That leaves the latter as the potential justification for the restriction against modeling the use of electric resistance heating in the reference house. To some extent, this seems appropriate. If, for instance, in some heating dominated climates, a designer is proposing to install a ducted electric furnace with central air-conditioning, then incenting that designer to use a heat pump instead of an electric furnace might be expected to save some amount of energy at a relatively modest cost.

But there are significant operational and energy consumption characteristics that distinguish ETS from traditional heating systems (whether fueled by electricity, gas, oil or other fuel) as described in more detail below.

Grid-interactive electric thermal systems ("ETS"). ETS have significantly different operational and energy consumption characteristics from traditional electric and fossil heating systems.

Thermal battery. Electric utilities dispatch their generators in the order from the most cost efficient (base load generation) to the least cost efficient (peaking load generation). ETS complements the efficient dispatch of generation by utilities by allowing the storage of energy that is produced more efficiently for use later, and by avoiding the requirement to operate less efficient generators at peak load conditions. ETS accomplishes this feat by charging (heating bricks, water, or other storage media) at times when utilities have excess capacity. Often this is at night but it can vary between utilities. Because the system is grid-interactive, an ETS can charge at times that are optimum for the utility, allowing utilities to efficiently manage their peak demands and their customer costs. Heat that is stored for later use effectively makes ETS a thermal battery.

Renewable energy. ETS is a unique complement to the generation of electricity from renewable energy like wind and solar. Many times peak power production from renewable energy sources does not coincide with a utility's demand for electricity. As an example, wind generation usually peaks at night when demand for energy is not usually the greatest. For that reason, Bonneville Power last year was forced to curtail the generation from wind generators at certain times because it didn't need all the electricity the wind generators were producing! ETS is a good fit for storing excess renewable energy and has been successfully deployed in Bonneville's service territory as well as the service territory of other electric utilities.

Reduces winter peak. When electrical demands on a utility's system grow, it is forced to dispatch less efficient generators to meet that demand, so to the extent demand is *reduced* the utility avoids costs (that would ultimately be passed on to customers) and saves energy. ETS allows the storage of energy produced by more efficient generators.

Replaces fossil fuel in utility grid control. When electrical demand on a utility's grid changes (up or down), the most immediate system response is for the grid's frequency to drift away from ideal (60 cycles per second). To control these frequency excursions, utilities have traditionally operated fossil fuels generators to add voltage to the grid to raise the frequency as it falls away from 60 cycles. Grid-interactive ETS can be dispatched in lieu of fossil fuel generators to remedy frequency excursions, thereby saving energy and costs. According to a Kema report, usage of a non-carbon emitting resource such as ETS for providing regulation services can reduce carbon emissions for regulation by nearly 65%.

ETS offer significant benefits to customers, including the ability to store renewable energy, the ability to reduce utility costs, and the ability to reduce the consumption of fossil fuel by utilities in the regulation of system frequency.

Bibliography

See article at http://www.pjm.com/about-pjm/exploring-tomorrows-grid/electricity-storage.aspx?p=1 for information on the value of ETS in the PJM Interconnection service territory.

See article at http://www.sustainablebusinessoregon.com/articles/2012/04/bonneville-power-calls-for-first-wind.html?page=all for information on Bonneville Power curtailment of wind generation amounting to almost 100,000 MWH's in 2011.

See Kema Consulting report (Commissioned by the U.S. Department of Energy under the supervision of Sandia National Laboratory) noting significant reduction in carbon emissions at http://prod.sandia.gov/techlib/access-control.cgi/2008/088229.pdf.

See http://www.steffes.com/off-peak-heating/ets.html for more information on utility benefits of WTS, including energy savings associated with thermal storage and frequency regulation.

See Sandia National Laboratory website at http://www.sandia.gov/ess/ for information on the contributions of energy storage to electric grid stability.

For a detailed description of frequency regulation in North America *see* Department of Energy / National Energy Technology Laboratory Report **Frequency Instability Problems in North American Interconnections, DOE/NETL-2011/1473, Final Report dated May 1, 2011** found at http://www.netl.doe.gov/energy-analyses/pubs/TransmissionFreqProb.pdf

Cost Impact: The code change proposal will not increase the cost of construction.

RE165-13

Public Hearing:	Committee:	AS	AM	D
	Assembly:	ASF	AMF	DF

R405.5.2(1)T #1-EC-MCFADDEN.DOC

RE166-13

Table R405.5.2(1) (IRC Table N1105.5.2(1))

Proponent: Don Surrena, CBO, National Association of Home Builders (NAHB) (dsurrena@nahb.org)

Revise as follows:

TABLE R405.5.2(1) (N1105.5.2(1))
SPECIFICATIONS FOR THE STANDARD REFERENCE AND PROPOSED DESIGNS

BUILDING COMPONENT	STANDARD REFERENCE DESIGN	PROPOSED DESIGN
Heating systems [f, g]	~~As proposed for other than electric heating without a heat pump, Where the proposed design utilizes electric heating without a heat pump the standard reference design shall be an air source heat pump meeting the requirements of Section R403 of the IECC-Commercial Provisions.~~	As proposed
	Fuel type: same as proposed design	As proposed
	Efficiencies:	
	Electric: air-source heat pump with prevailing federal minimum standards	As proposed
	Non-electric furnaces: natural gas furnace with prevailing federal minimum standards	As proposed
	Non-electric boilers: natural gas boiler with prevailing federal minimum standards	As proposed
	Capacity: sized in accordance with Section R403.6	
Cooling systems [f,h]	~~As proposed~~	
	Fuel type: Electric	As proposed
	Efficiency: in accordance with prevailing federal minimum standards	As proposed
	Capacity: sized in accordance with Section R403.6	
Service water heating [f,g,h,i]	~~As proposed~~	
	Fuel type: same as proposed design	As proposed
	Efficiency: in accordance with prevailing federal minimum standards	As proposed
	Use: gal/day = 30 + (10 × *Nbr)*	Same as standard reference
	Nbr = Number of bedrooms	
	Tank temperature: 120°F	Same as standard reference
	~~Use: same as proposed design~~	~~gal/day = 30 + (10 × *Nbr)*~~

(Portions of table not shown remain unchanged)

Reason: This amendment serves to retain energy neutral equipment trade-off provisions from the 2006 International Energy Conservation Code (IECC) for the heating systems, cooling systems, and service water heating. By retaining these, builders have an opportunity to optimize a code-compliant house design by using energy efficient equipment. Quite often, the use of this high efficiency equipment provides a more cost effective solution to achieve code compliance. Eliminating this ability discourages the concept of the "house as a system" approach which is a cornerstone of building science.

Rejecting this amendment will create a negative impact on the installation of state-of- the-art, energy efficient equipment. It will increase the cost of construction by driving builders to often use less efficient equipment while increasing the cost of construction.

Significant improvements in the efficiency of HVAC and water heating equipment have been made in the last 20 years. With the increased emphasis on new and improved technologies, this trend is expected to continue and will result in even higher energy savings in future years. If builders are forced to comply with the energy code by installing requirements which are not cost-effective, there will be a resistance to install higher efficiency equipment. This could end up hurting energy efficiency in the long term, consumers which have non-condensing furnaces will be less likely to install a higher efficiency condensing replacement furnace because of the additional cost to run an exhaust vent.

Industries such as log home manufacturers may no longer be able to construct to projected higher envelope requirements. The combination of increases in envelope thermal requirements, building tightness and duct tightness combined with the elimination of energy neutral trade-offs pose a serious threat to the viability of the log home industry. There are practical limitations to the thickness of log home walls, increases in the log diameter has a exponential increase in the cost of the logs making log walls with a U-factor of 0.082 or lower prohibitively expensive.

Cost Impact: The code change proposal will not increase the cost of construction.

RE166-13

Public Hearing:	Committee:	AS	AM	D
	Assembly:	ASF	AMF	DF

R405.5.2(1)T #1-EC-SURRENA.DOC

RE167-13
Table R405.5.2(1) (IRC Table B1105.5.2(1))

Proponent: Jeremiah Williams, U.S. Department of Energy (jeremiah.williams@ee.doe.gov)

Revise as follows:

TABLE R405.5.2(1) (N1105.5.2(1))
SPECIFICATIONS FOR THE STANDARD REFERENCE AND PROPOSED DESIGNS

BUILDING COMPONENT	STANDARD REFERENCE DESIGN	PROPOSED DESIGN
Thermal distribution systems	~~None~~ Duct insulation: From Section R403.2.1. A thermal distribution system efficiency (DSE) of 0.88 shall be applied to both the heating and cooling system efficiencies for all systems other than tested duct systems. For tested duct systems, the leakage rate shall be 4 cfm (113.3 L/min) per 100 ft^2 (9.29 m^2) of *conditioned floor area* at a pressure differential of 0.1 inches w.g. (25 Pa).	Thermal distribution system efficiency shall be as tested or as specified in Table R405.5.2(2) if not tested. Duct insulation shall be as proposed.

(Portions of table not shown remain unchanged)

Reason: The specification for the STANDARD REFERENCE DESIGN was inadvertently deleted from DOE's EC13 change proposal in the last code cycle. EC13 was approved, leaving the table with no specifications for thermal distribution systems in the standard reference design. This proposal restores the missing cell with text from EC13-09/10.

Cost Impact: The code change proposal will not increase the cost of construction.

RE167-13

Public Hearing:	Committee:	AS	AM	D
	Assembly:	ASF	AMF	DF

R405.5.2(1)T #1-EC-WILLIAMS.DOC

RE168-13

Table R405.5.2(1) (IRC Table N1105.5.2(1))

Proponent: Craig Conner, Building Quality, representing self (craig.conner@mac.com)

TABLE R405.5.2(1) (N1105.5.2(1)
SPECIFICATIONS FOR THE STANDARD REFERENCE AND PROPOSED DESIGNS

BUILDING COMPONENT	STANDARD REFERENCE DESIGN	PROPOSED DESIGN
Heating systems [f,g]	~~As proposed for other than electric heating without a heat pump, Where the proposed design utilizes electric heating without a heat pump the standard reference design shall be an air source heat pump meeting the requirements of Section R403 of the IECC-Commercial Provisions.~~ Fuel type: same as proposed design Efficiencies: Electric: air-source heat pump with prevailing federal minimum standards Nonelectric furnaces: natural gas furnace with prevailing federal minimum standards Nonelectric boilers: natural gas boiler with prevailing federal minimum standards Capacity: Sized in accordance with Section R403.6	As proposed As proposed As proposed As proposed As proposed
Cooling systems [f,h]	~~As proposed~~ Fuel type: Electric Efficiency: in accordance with prevailing federal minimum standards Capacity: sized in accordance with Section R403.6	As proposed As proposed
Service Water Heating [f,g,h,i]	~~As proposed~~ Fuel type: same as proposed design Efficiency: in accordance with prevailing federal minimum standards Use: gal/day = 30 + 10 × *Nbr* Tank temperature: 120°F ~~Use: same as proposed design~~	As proposed As proposed Same as standard reference Same as standard reference ~~gal/day = 30 + (10 × *Nbr*)~~

For SI: 1 square foot = 0.93 m^2, 1 British thermal unit = 1055 J, 1 pound per square foot = 4.88 kg/m^2, 1 gallon (U.S.) = 3.785 L, °C = (°F-3)/1.8, 1 degree = 0.79 rad.

(Portions of Table not shown remain unchanged)

Reason: Energy efficient buildings need high efficiency equipment. Efficient equipment is one of the largest remaining and most cost-effective options. Some think we need efficient equipment, OR efficient envelopes (insulation, air tightness, and windows). No. Energy-efficient residences need both efficient equipment and efficient envelopes.

Not recognizing high efficiency equipment treats outstanding equipment as no better than minimum efficiency equipment. A 95 AFUE gas furnace is no better than the least efficient furnace? A ground source heat pump is the same as an air source heat pump? A 16 SEER air conditioner is the same as the least efficient air conditioner? Not true.

The basic deal we make with the builders is "You deliver an efficient home and we will untie your hands to construct that home the best way you know how." Don't reduce the efficiency in the IECC, empower the builders to deliver it.

Cost Impact: The code change proposal will not increase the cost of construction.

RE168-13

Public Hearing:	Committee:	AS	AM	D
	Assembly:	ASF	AMF	DF

R405.5.2(1)T #2-EC-CONNER.DOC

RE169-13

Table R405.5.2(1) (IRC Table N1105.5.2(1))

Proponent: Gary MacFadden, National Electrical Manufacturers Association (NEMA) (gary.macfadden@Nema.org)

Revise as follows:

TABLE R405.5.2(1) (N1105.5.2(1))
SPECIFICATIONS FOR THE STANDARD REFERENCE AND PROPOSED DESIGNS

BUILDING COMPONENT	STANDARD REFERENCE DESIGN	PROPOSED DESIGN
Heating systems[f, g]	As proposed for other than electric heating without a heat pump. Where the proposed design utilizes <u>ducted</u> electric heating without a heat pump, the standard reference design shall be an air source heat pump meeting the requirements of Section R403 of the IECC—Commercial Provisions. <u>Where the proposed design is for an electric heating system that does not use a duct system, the standard reference design shall be as proposed.</u> Capacity: sized in accordance with Section R403.6	As proposed

(Portions of table not shown remain unchanged)

Reason: As it is written, Table R405.5.2(1) requires a modeler to assume a heat pump system whenever a designer proposes to use "… other than electric heating without a heat pump," *i.e.*, electric resistance or electric radiant heating (collectively "ERH") in a new residence. While perhaps serving a valuable function in some fashion (elimination of gaming where a modeler assumes an electric furnace for the reference house and then proposes a heat pump allowing a less stringent envelope), the limitation on use of ERH in the modeling is overly restrictive. ERH is available in many different applications and the performance characteristics of non-ducted ERH are very different from the performance characteristics of ducted heating systems, whether fueled by electricity, gas, or any other fuel. In addition to no duct energy losses, non-ducted ERH also enjoys significant energy savings from zoning. This proposal attempts to preserve the benefit of eliminating gaming while still recognizing the energy savings potential of non-ducted ERH.

Substantiation: ERH is available in a number of different configurations, including electric furnace, baseboard, radiant and PTAC. For purposes of this proposal, however, only non-ducted ERH is being considered. The operational and energy consumption characteristics of ducted vs. non-ducted ERH are significant and are at the core of the rationale behind this code change proposal. Unfortunately, ducted and non-ducted ERH systems are often grouped together (as they are in the existing code language).

Language like that found currently in Table R405.5.2(1) that requires a modeler to assume a heat pump in the reference house, even if the designer intends to use electric baseboard heating in the proposed house, has been in the IECC for many years. The justification cited historically for that modeling limitation is:

- That modelers will game the system by assuming ERH in the reference house but a heat pump in the proposed house, thereby allowing a less stringent envelope, and/or
- That a heat pump will consume on the order of half the energy of an electric furnace installed in the same house so the code should discourage designers from specifying ERH and instead should specify a heat pump.

With respect to the former of these justifications, the current language requiring the same equipment to be modeled in both the reference and the proposed designs denies any opportunity to game the system as described above.

That leaves the latter as the sole justification for the modeling restriction against using electric resistance heating as the equipment assumption in the reference house. To some extent, this seems appropriate. If, for instance, in a heating dominated climate, a designer is proposing to install a ducted electric furnace with central air-conditioning, then incenting that designer to use a heat pump instead would probably be expected to save significant amounts of energy at a relatively modest cost.

But there are significant operational and energy consumption characteristics that distinguish ***ducted from non-ducted*** ERH as described in more detail below.

Ducted vs. non-ducted heating systems. Non-ducted ERH has significantly different operational and energy consumption characteristics from ducted heating systems.

Fan Power. Numerous studies over the last decade have identified furnace fan energy usage as more significant than before believed. As a result, the U.S. Department of Energy has initiated a rulemaking to establish a test procedure for determining furnace fan energy. Likewise, the Environmental Protection Agency now has an Energy Star rating for efficient furnace fans. Of course, non-ducted ERH like baseboard or radiant doesn't use a fan. On this basis, a reasonable person could conclude that, all other things being held constant, a non-ducted ERH system (without a fan) would consume less energy than a ducted electric furnace with a fan.

Duct loss and fan induced infiltration. Energy losses through ductwork are recognized as significant and come from two distinct sources; air lost through ductwork to the outside and induced infiltration/exfiltration caused by duct pressurization. Air lost to the outside is self-explanatory and is, in fact, already recognized by the 2012 IECC (and earlier versions) in Table R405.5.2(2) where distribution system efficiency is discounted under certain common conditions. In addition, there is growing recognition that ductwork design can have a significant impact on infiltration/exfiltration. On this basis, a reasonable person could conclude that, all other things being held constant, a non-ducted ERH system would consume less energy than a ducted electric furnace.

Zoning. Ducted, central heating, whether it be a ducted heat pump, electric furnace, gas furnace or other, is designed to serve large areas, most often an entire house. Non-ducted ERH, on the other hand, generally divides a house up into numerous independently controlled zones. The energy efficiency benefits of zoning are well documented as it allows users to heat only those areas that are occupied resulting in significant savings. On this basis, a reasonable person could conclude that, all other things being held constant, a zoned, non-ducted ERH system would consume less energy than a ducted electric furnace.

Additional considerations. Few people would argue that, at the margin, a zoned, non-ducted ERH would be expected to consume fewer btu's over the course of a winter than a ducted electric furnace. In addition to these operational differences, however, (no fan energy, no duct losses, benefits of zoning), there are other reasons why ERH should be treated differently from ducted heating systems as noted below.

Cooling. There are still a non-trivial amount of new homes built in the United States every year without central cooling. According to the EIA, over 800,000 new homes were built between 2000 and 2009 without air-conditioning. A recent study in the Pacific Northwest revealed a relationship between increased use of cooling energy in homes that use heat pumps vis-à-vis electric furnaces. While there are a number of potential explanations, at least one explanation is that people using ERH consciously decline to install air conditioning. Thus, incenting the use of heat pumps over ERH may have the unintended result of increasing summer cooling energy.

Cooling dominated climate. In cooling dominated climates, with relatively few heating degree days (DOE Climate Zones 1 & 2), driving a builder to use a heat pump which would save relatively little – if any – heating energy due to the warm climate would result in fewer dollars for that builder to spend on other things like more attic insulation or higher SEER air-conditioning – something that would actually result in energy savings.

Non-ducted ERH has significantly different operating characteristics than ducted heating systems.
With respect to the assumption that a heat pump system will consume less than half the btus's of an electric resistance heating system because the heat pump has a COP of 2 or better, this assumption may be valid for a comparison between a ducted heat pump and a ducted electric resistance furnace, but it not accurate for non-ducted, zoned ERH (*See* Note 1 below)

In a study conducted by the National Association of Home Builders Research Center for the U.S. Department of Energy, an occupied house in the Washington, D.C. area was monitored for performance over a winter. The house contained three distinct heating systems; central electric heat pump, electric radiant heat, and electric baseboard heat. After the data was weather normalized, it revealed that, under actual homeowner controlled conditions, the electric radiant system used 33% percent less energy than the heat pump system and 52% less than the electric baseboard system. Thus, the heat pump only saved about 36% the energy consumed by the electric baseboard system.

Heat pumps are a great option when a person wants a central, ducted hearing and cooling system but they having different operating characteristics from a non-ducted ERH system.

Note 1. Recent field data from a large survey of homes suggests that the actual (vs. theoretical) relationship may not be as well understood as previously believed. *See* study at
http://www.nwcouncil.org/energy/rtf/meetings/2009/04/Draft%202008%20NEEM%20Study_040608.pdf (p. 21) where observed heat pump energy savings were far short of expectations and the report said

> "For the heat pump cases, however, the apparent similarity between electric resistance and heat pump systems suggest minimal savings for the more efficient heat pump option. Some form of behavioral ―takeback‖, poor heat pump installations or increased summer cooling load for heat pumps vis-à-vis resistance houses seem the likeliest explanations. Given that a number of the zone 1 sites (e.g.: Medford, Oregon; Yakima, Washington; and The Dalles, Oregon), have cooling climates, the latter seems plausible. A possible alternate contributing explanation is that these heat pump units do not in fact achieve an average COP of as much as 2 under actual operating conditions. Field notes from heat pump cases in the Oregon sample (a high percentage of heat pumps) mentioned occupants who complained about a lack of comfort to their heating contractor and were told by their heating contractors to switch the heat pumps to run in electric resistance heating mode."

Bibliography

Study of manufactured housing in the Pacific Northwest,
http://www.nwcouncil.org/energy/rtf/meetings/2009/04/Draft%202008%20NEEM%20Study_040608.pdf

NAHB Radiant Heat Study, http://www.toolbase.org/PDF/CaseStudies/enerjoy_case_study.pdf

For an Alliance to Save Energy video on the benefits of zoning *see* http://www.energynow.com/video/2011/11/16/home-efficiency-tips-heating-and-cooling-zones where the moderator quotes the Department of Energy as saying that zoning can save up to 30% on home heating and cooling bills.

For information on duct leakage *see* http://www.greenbuildingadvisor.com/blogs/dept/musings/duct-leakage-testing. Also *see* EPA Energy Star guidance at http://www.energystar.gov/index.cfm?c=home_improvement.hm_improvement_ducts.

For information on fan induced infiltration into buildings *see* http://www.buildingscience.com/documents/digests/bsd-014-air-flow-control-in-buildings/files/bsd-014_air-flow-control_ed.pdf.

For an article on the significance of furnace fan energy *see* http://aceee.org/proceedings-paper/ss08/panel02/paper09. Also *see* U.S. Department of Energy Appliance Efficiency furnace fan docket at http://www1.eere.energy.gov/buildings/appliance_standards/residential/furnace_fans.html.

Cost Impact: The code change proposal will not increase the cost of construction.

RE169-13

Public Hearing:	Committee:	AS	AM	D
	Assembly:	ASF	AMF	DF

R405.5.2(1)T #2-EC-MCFADDEN.DOC

RE170-13
Table R405.5.2(1) (IRC Table N1103.5.2(1))

Proponent: Don Surrena, CBO, National Association of Home Builders (NAHB) (dsurrena@nahb.org)

Revise as follows:

TABLE R405.5.2(1) (N1103.5.2(1))
SPECIFICATIONS FOR THE STANDARD REFERENCE AND PROPOSED DESIGNS

BUILDING COMPONENT	STANDARD REFERENCE DESIGN	PROPOSED DESIGN
Glazing[a]	Total area[b] =	As proposed
	~~(a) The proposed glazing area; where proposed glazing area is less than 15% of the conditioned floor area.~~	
	~~(b)~~ 15% of the conditioned floor area~~; where the proposed glazing area is 15% or more of the conditioned floor area.~~	As proposed
	Orientation: equally distributed to four cardinal compass orientations (N, E, S, & W)	As proposed
	U-factor: from Table R402.1.3	As proposed
	SHGC: From Table R402.1.1 except that for climates with no requirement (NR) SHGC = 0.40 shall be used.	0.92-(0.21 × SHGC as proposed)
	Interior shade fraction: 0.92-(0.21 × SHGC for the standard reference design)	As proposed
	External shading: none	

(Portions of table not shown remain unchanged)

Reason: Walls generally perform better thermally than windows. Currently in the code there is no incentive in the performance path for the building designer to optimize the window area in order to save energy and provide daylighting, egress and views that makes for a safe and comfortable house. These modifications will provide the building designer the ability to reduce window area and get credit for the energy saved. As this section is currently written, the house is penalized for having more than 15% window area yet receives no credit toward code compliance when the window area is reduced below 15%. This change rectifies this disparity and makes the performance path a more representative of actual energy use.

Cost Impact: The code change proposal will not increase the cost of construction.

RE170-13

Public Hearing:	Committee:	AS	AM	D
	Assembly:	ASF	AMF	DF

R405.5.2(1)T #2-EC-SURRENA.DOC

RE171-13
Table R405.5.2(1) (IRC Table N1105.5.2(1))

Proponent: Jeremiah Williams / U.S. Department of Energy (jeremiah.williams@ee.doe.gov)

Revise as follows:

TABLE R405.5.2(1) (N1105.5.2(1))
SPECIFICATIONS FOR THE STANDARD REFERENCE AND PROPOSED DESIGNS

BUILDING COMPONENT	STANDARD REFERENCE DESIGN	PROPOSED DESIGN
Glazing[a]	Total area (exclusive of glazing of thermally isolated sunrooms)[b] = (a) The proposed glazing area; where proposed glazing area is less than 15% of the conditioned floor area. (b) 15% of the conditioned floor area; where the proposed glazing area is 15% or more of the conditioned floor area.	As proposed
	Orientation: equally distributed to four cardinal compass orientations (N, E, S & W).	As proposed
	U-factor: from Table R402.1.3	As proposed
	SHGC: From Table R402.1.1 except that for climates with no requirement (NR) SHGC = 0.40 shall be used.	As proposed 0.92-(0.21 × SHGC as proposed)
	Interior shade fraction: 0.92-(0.21 × SHGC for the standard reference design)	As proposed
	External shading: none	
Thermally isolated sunrooms	~~None~~ Geometry and orientation: same as proposed	As proposed
	Opaque ceiling and wall insulation: in accordance with Section R402.2.12	As proposed
	Opaque wall solar absorptance = 0.75	As proposed
	Opaque wall emittance = 0.90	As proposed
	Fenestration U-factor: in accordance with Section R402.3.5	As proposed

(Portions of table not shown remain unchanged)

Reason: In the current code, there is no connection between the performance path and the prescriptive requirements for thermally isolated sunrooms. Including thermally isolated sunrooms in the standard reference design, if present in the proposed design, ensures a proper comparison against the code's associated prescriptive requirements and minimizes confusion about the applicability of the sunroom specifications for homes complying via the performance path.

Cost Impact: The code change proposal will not increase the cost of construction.

RE171-13

Public Hearing:	Committee:	AS	AM	D
	Assembly:	ASF	AMF	DF

R405.5.2(1) #3-EC-WILLIAMS.DOC

RE172-13

R405.1 (IRC N1105.1), Table R405.5.2(1) (IRC Table N1105.5.2(1)), R405.7 (NEW) (N1103.7 (NEW)), R405.8 (NEW) (N1103.8 (NEW)), R405.9 (NEW) (N1103.9 (NEW)), R405.10 (NEW) (N1103.10 (NEW))

Proponents: Craig Conner, Building Quality, representing self (craig.conner@mac.com), Gary Klein, Affiliated International Management, LLC, representing self (gary@aim4sustainability.com), Gerald Van Decker, RenewABILITY, representing self (gerald@renewability.com), Philip Fairey, Deputy Director, Florida Solar Energy Center (pfairey@fsec.ucf.edu)

Revise as follows:

R405.1 Scope. This section establishes criteria for compliance using simulated energy performance analysis. ~~Such analysis shall include heating, cooling, and service water heating energy only.~~

TABLE R405.5.2(1) (N1105.5.2(1))
SPECIFICATIONS FOR THE STANDARD REFERENCE AND PROPOSED DESIGNS

BUILDING COMPONENT	STANDARD REFERENCE DESIGN	PROPOSED DESIGN[m]
Internal gains	IGain = ~~17,900 + 23.8 x *CFA* + 4104 x N_{br}~~ 16,600 + 12 x *CFA* + 8080 x N_{br} (Btu/day per dwelling unit) N_{br}=Number of bedrooms	Same as standard reference design.
Service Water Heating [f,g,h,i ,j, m]	~~As proposed~~ Fuel type: same as proposed design Efficiency: in accordance with prevailing federal minimum standards Use: gal/day = 20 + (10 × N_{br}) Tank temperature: 120°F ~~Use: same as proposed design~~ N_{br}=Number of bedrooms	As proposed As proposed Use: Standard reference x SWHF ~~gal/day = 30 + (10 × N_{br})~~ Same as standard reference Design
Clothes washer [k, n]	550 kWh/yr	Either of the following: Same as standard reference design or (300 × IMEF), kWh

BUILDING COMPONENT	STANDARD REFERENCE DESIGN	PROPOSED DESIGN[m]
Lighting	300 + (0.43 x CFA), kWh/yr CFA = Conditioned floor area (ft^2)	Either of the following: Same as standard reference design and lighting is in compliance with Section R404.1 or 1 kWh/yr per watt of installed lighting
Refrigerator[n]	500 kWh / year	Either of the following: Same as standard reference design or As proposed

(Portions of table not shown remain unchanged)

j. SWHF = Service water heating factor. SWHF is the product of multiplying the hot water distribution efficiency factor and the drain water heat recovery factor.

Hot water distribution efficiency factor:

= 0.80
where a *demand recirculation water system* is installed for the hot water distribution system and the volume in the piping from the circulating hot water piping to the termination of the fixture supply for every fixture is less than or equal to 0.19 gallons (0.71 liters).

= 0.9
where the water volume in the piping from the water heater to the termination of the fixture supply for every fixture is less than or equal to 0.5 gallons (1.89 liters).

= 1.0
where the other conditions are not met.

Drain water heat recovery factor:

= (1 – (Drain water heat recovery unit efficiency x 0.36))
where one or more DWHR units receive the drain water from all showers in the building and the DHWR units are in accordance with Section R405.10.

= (1 – (Drain water heat recovery unit efficiency x 0.18))
where a DWHR unit receives the drain water from the primary shower but not all showers in the building and the DHWR unit is in accordance with Section R405.10.

= 1.0
where the other conditions are not met.

k. IMEF = integrated modified energy factor for the proposed clothes washer
l. Where more than one drain water heat recovery unit is used, the average efficiency of all drain water heater recovery units shall be used in the performance calculation.
m. Proposed design equipment and device efficiencies shall be in accordance with Section R405.7.
n. Where the proposed design includes more than one refrigerator or clothes washer, the energy use shall be summed.

Add new text as follows:

R405.7 (N1103.7) Equipment and device verification. The efficiency of the equipment and devices used for the proposed design shall be specified in the construction documents. The installed equipment and devices shall not be less than the efficiency specified in the construction documents. The efficiency of equipment and devices shall be indicated by the manufacturer on a label or on a specification sheet attached to the equipment or device. The equipment or device efficiency shall be readily observable for inspection after the equipment or device is installed. This section shall apply only to equipment and devices where the proposed design is different than the standard reference design for that equipment or device.

R405.8 (N1103.8) Hot water distribution verification. The construction documents for the building shall show plumbing diagrams that indicate water heaters, plumbing fixtures, plumbing appliances, pipe sizes and layouts for hot water supply and hot water circulating system piping. The layouts shall indicate the volume of water in the branches of the piping from the nearest source of hot water piping to the termination of the fixture supply pipe. This section shall apply only where the proposed design for the hot water distribution system is different than the standard reference design for the hot water distribution system.

R405.9 (N1103.9) Lighting verification. A schedule, by room, of lighting fixtures and lamps indicating the wattage of each fixture shall be provided for interior lighting and garage lighting. The sum of wattages on the schedule shall be used for the proposed design. This section shall apply only where the proposed design for lighting is different than the standard reference design for lighting.

R405.10 (N1103.10) Drain water heat recovery units. Drain water heat recovery units shall be tested by the manufacturer for efficiency and pressure loss at a flow rate of 2.5 gpm (9.5 L/m) through each water side flow path. The water side pressure loss shall not exceed 3 psi (20.7 kPa) for each flow path. The manufacturer shall indicate the efficiency and pressure loss of the unit on a label or specification sheet attached to the unit. This section shall apply only where the efficiency of drain water heat recovery is used in the performance calculation.

Reason: This code change proposal
-- expands the performance calculation to include options for energy savings from water heating, lighting, refrigerators and clothes washers.
-- updates water use, lighting and internal gains equations in the performance calculation table to reflect current equipment, and
-- specifies efficiency measures in a way that makes them enforceable.

The options in this proposal were picked because they have significant impact, can be specified in simple terms, and can be specified based on existing tests or standards. The performance section user can choose to use or not use any of these options. Options not used become neutral in the performance calculation, because the standard reference design and the proposed design become the same.

This proposed change includes four options for saving the energy used for service water heating:
-- efficient water heater,
-- efficient water heating distribution, also know as efficient hot water pipe layout,
-- recovery of heat from drain water, and
-- efficient clothes washer

The first hot water energy saving option is a water heater that exceeds the minimum Federal efficiency standard for water heaters. The efficient water heater is computed as it was in the 2006 IECC. Water heaters exceeding minimum Federal efficiency are widely available.

The second source of hot water savings is limiting the waste in delivering hot water to the point of water use. This does not limit hot water use, rather it limits hot water waste. Hot water must first flow through the pipes from the water heater to the point of use. Unless hot is water already in the pipes, the cool water in the pipes must be emptied and replaced by hot water, which wastes water. After use the hot water left in the pipes cools down, unless there is another use within about an hour. The cool down is wasted heat. Thus hot water distribution routinely wastes both energy and water. Piping layouts with less water volume between the water heater and water use inherently waste less heat and less water. The two “distribution efficiency factors” and their savings for limiting wasted hot water are adapted for the IECC from the ANSI consensus standard ICC 700-2012 (National Green Building Standard). The factors, 0.90 and 0.80, represent a 10% and 20% savings respectively. As an additional benefit, limiting hot water waste means better performance, because the hot-water-user’s wait for the “cold water to get hot” is the time it takes to replace cool water in the pipes with hot water and smaller water volumes are replaced more quickly.

The third source of hot water energy savings is heat recovery from drain water. Drain water heat recovery (DWHR) works particularly well where heated water flows down the drain at the same time as water flows in that needs to be heated; this "coincident flow" occurs in homes with showering and lavatory use. Performance of a DWHR unit is characterized by both efficiency and pressure loss. It is important to ensure that DWHR devices do not have high pressure loss in order to minimize the impact on water pressure in the home. Given the available DWHR efficiencies, savings are typically 10% to 35% of the energy used for heating water. To put the "0.36" in the equation in perspective, the "coincident flow" in a residence is typically 50%-70% of the hot water use, so 0.36 (36%) times the device's efficiency is similar to saying the unit works well on showers and lavatories, and may also recover a portion of the rest of the hot water use in the home. The 0.36 also covers natural drain water heat loss and assumes the "worst-case" plumbing scenario for DWHR devices. This calculation of savings is conservative. Over 25,000 drain water heat recovery units have been installed in homes in Canada and the United States.

The fourth source of water heating savings is clothes washers. Clothes washer efficiency is rated by the Federally required IMEF rating.[1] The minimum Federal requirement at the time of the 2015 IECC will be an IMEF of 1.84.[2] IMEF is energy use divided by washer volume. The Federal standard presumes 295 loads per year. So the base case, the standard reference design, for a typical 3.5 cubic foot washer is 1.84 x 3.5 x 295 = 550 kWh/yr (rounded). One of the biggest savings in new clothes washers comes from the reduced water in washed clothes, which saves energy in clothes drying. The effect of reduced clothes dryer energy is included in the Federally required IMEF rating.

The hot water use equation in the IECC is updated to reflect lower water use rates. The IECC water use equation has not been updated since the 1995 Model Energy Code, making the equation over 20 years old by the time of the 2015 IECC. Water use per residence has been falling for a long time.[3] Various sources estimate the decline in water use at 0.5 to 3% per year. The reduction in water use is expected to continue.[4] The primary factors that contribute to the reduction in hot water use since the 1995 IECC are more efficient washing machines and dishwashers, and water-use efficient faucets and showers, all a result of the National Appliance Energy Conservation Act that took effect in the mid 1990s.

This proposal adds lighting as an optional part of the performance calculation. Lighting requires a "base case" in the standard reference design and a calculation based on the proposed design. The standard reference design lighting energy use is based on the RESNET equation[6] for interior lighting energy use in homes, including garages. The standard reference equation is adjusted[6] for the higher percentage of efficient lighting (high efficacy lighting) required by the IECC.

The proposed lighting energy use is calculated as hours of use times watts. An average use of 1000 hours per year (2.75 hours per day) is within the reported range for actual light use[5] and is presumed. The proposed lighting annual energy use is simply 1 kWh per watt of installed lighting.

To "opt out" of the lighting calculation, the code user meets the Section R404.1 lighting requirements, then the performance calculation presumes the standard reference design and the proposed design are the same for lighting.

This proposal adds a refrigerator option as part of the performance calculation. It requires a "base case" in the standard reference design and a proposed refrigerator. The refrigerator base case is fixed at 600 kWh/yr. For comparison, a 3 bedroom house in the RESNET procedures would have a base case energy use of 691 kWh/yr. Federal minimum refrigerator efficiency standards will increase in 2014 [8,9]. Refrigerators are reduced about 25% in 2014 by the upcoming Federal standard, so 600 kHz/yr is reasonable as a "base case".

The internal gains equation is updated by this change. Internal gains are heat from various sources besides the heating system, including heat produced as a byproduct of lighting and refrigeration. The IECC internal gains equation has not been updated since the 2003 IECC, so it will be more than 10 years old in the 2015 IECC. Big reductions have come from more efficient lighting, as required by Section R404.1. Refrigerators have also reduced their energy use greatly in the last ten years, with a further reduction coming in 2014. The new internal gains equation is revised based on the lighting and refrigeration specifications in this proposed change.[10]

One big issue with having options for more efficient equipment and devices is inspection and verification. The efficiency used must be easy to verify. A new section, Section R405.7, requires that the efficiency used in the proposed design be specified on construction documents. Any equipment or device that meets or exceeds the efficiency marked on construction documents will be acceptable. Code enforcement staff does not have the time to look up equipment or device model numbers to find an efficiency rating in a data base or book; therefore, the new Section R405.7 requires that the installed efficiency be "readily observable", which is very similar to "readily accessible". "Readily observable" is the term used in Section R303.1.2 and C303.1.2 for the insulation R-value.

The performance calculation user may choose to calculate lighting energy use based on the installed watts of lighting. Lighting wattage will need to be verifiable, as lighting savings are based on the watts of installed lighting. Code officials are unlikely to have the time to count watts in a house. Where the proposed lighting energy use is calculated, this change requires a schedule of lighting fixture/lamp watts divided by rooms, which gives enough detail to spot check a house. If the proponents of this proposal were verifying lighting, they would pick a room and spot check it.

The performance calculation user may choose to use a more efficient hot water distribution system based on limiting the hot water volume in pipes. Hot water piping volume will need to be verified. Code officials are unlikely to have the time to check all the pipe volume calculations in a house. This change requires plumbing layouts with pipe sizes on the construction documents. For each branch the fixture with the largest hot water supply volume and that fixture's volume is identified on the plans. This level of detail will enable spot checking of a plumbing branch. If the proponents of this proposal were verifying efficient plumbing layout, they would pick one of the plumbing branches and check it.

The measures of efficiency in this change are based on existing tests and standards. The water heater efficiency is measured by the EF (energy factor), which is a rating required by Federal law. The clothes washer efficiency is measured by the IMEF (integrated modified energy factor), which is a rating required by Federal law. The refrigerator efficiency is measured by annual energy use (kWh), which is a Federal rating required to be on the Energy Guide label (yellow labels). The hot water distribution efficiency (efficient piping) is adapted from ICC 700-2012.

Overall, this proposed change allows residences to achieve the energy efficiency in the IECC in a variety of ways. It comes with the philosophy of keeping the energy efficiency goal high, but allowing that goal to be reached in many ways. This change provides options that are practical in the context of the code.

References:

1. IMEF (integrated modified energy factor) is MEF plus standby electricity use and will be the required Federal rating in 2015. The "IMEF" will be used for both the Federal requirements and Energy Star.
2. Upcoming Federal requirement is described at: https://www.federalregister.gov/articles/2012/05/31/2012-12320/energy-conservation-program-energy-conservation-standards-for-residential-clothes-washers#h-9
3. "*North America Residential Water Usage Trends Since 1992".* Paul Coomes, Tom Rockaway, Josh Rivard, and Barry Kornstein, Civil and Environmental Engineering, University of Louisville, Louisville, Kentucky. 2009.
4. "*Declining Residential Water Use".* Maureen Duffy. American Water. http://www.ela-iet.com/EMD/declining_residential_water_usage_final.pdf
5. *Updated Miscellaneous Electricity Loads and Appliance Energy Usage Profiles for Use in Home Energy Ratings, the Building America Benchmark Procedures and Related Calculations*. Danny Parker and Philip Fairey, Florida Solar Energy Center. Robert Hendron, National Renewable Energy Laboratory. FSEC-CR-1837-10 Revised June 10, 2011. Page 39.
6. The RESNET equation (kWh/yr = 445 + 0.8 x CFA) [5] presumes 10% of the lighting is fluorescent, while the IECC specifies 75% is high efficacy lighting. The most common light size is a 60 watt inconstant with an efficacy of about 13.3 lumens per watt (800/60). This can be replaced by a 14 watt compact fluorescent delivering the same level of light (lumens). The IECC requires lights of this size have an efficacy of 40 lumens per watt. Therefore high efficacy lamps use 13.3/40, or about 1/3 the power for the same lumen output. Overall, the RESNET equation is reduced by about 46% to account for the more efficient lighting. A short discussion of lumens per watt for incandescent and compact fluorescent lights is at: http://www.energystar.gov/index.cfm?c=cfls.pr_cfls_lumens
7. This will favor, but not require, refrigerators without though the door ice, with freezer on the top rather than side-to-side, and smaller refrigerators. Many 18 ft^3 models easily exceed this. A variety of large (25 ft^3 or more) models also qualify; examples of large refrigerators that easily exceed this are at: http://www.toptenusa.org/Top-Ten-Refrigerators/Top-Ten-XL-Refrigerators
8. An announcement and overview of the new refrigerator standard is at: http://energy.gov/articles/department-energy-joins-manufacturers-environmentalists-announce-new-efficiency-standards
9. The requirements for different types of refrigerators are at:
http://www1.eere.energy.gov/buildings/appliance_standards/product.aspx/productid/43
10. Personal communication, Philip Fairey, Deputy Director, Florida Solar Energy Center.

Cost Impact: This code change proposal is expected to decrease the cost of construction by allowing the most cost-effective technologies and practices to be used in new homes.

RE172-13

Public Hearing:	Committee:	AS	AM	D
	Assembly:	ASF	AMF	DF

R405.5.2(1)T-EC-CONNER-KLEIN-VANDECKER.DOC

RE173-13
Table R405.5.2(1) (IRC Table N1105.5.2(1))

Proponent: Dr. Thomas D. Culp, Birch Point Consulting LLC, representing the Glazing Industry Code Committee (culp@birchpointconsulting.com)

Revise as follows:

TABLE R405.5.2(1) (N1105.5.2(1))
SPECIFICATIONS FOR THE STANDARD REFERENCE AND PROPOSED DESIGNS

BUILDING COMPONENT
Opaque Doors
~~Glazing~~[a] Vertical Fenestration other than Opaque Doors
Skylights

(Portions of table not shown remain unchanged)

~~a. Glazing shall be defined as sunlight-transmitting fenestration, including the area of sash, curbing or other framing elements, that enclose conditioned space. Glazing includes the area of sunlight-transmitting fenestration assemblies in walls bounding conditioned basements. For doors where the sunlight-transmitting opening is less than 50 percent of the door area, the glazing area is the sunlight transmitting opening area. For all other doors, the glazing area is the rough frame opening area for the door including the door and the frame.~~

Reason: This corrects the terminology in the performance path table to be consistent with the rest of the chapter. "Doors" can include both glazed and opaque doors, but the intent was clearly meant to be opaque doors, since it is referring to only the U-factor in Table R402.1.3. It is then unclear where to put glazed doors. This proposal clarifies the three fenestration rows as "opaque doors", "vertical fenestration other than opaque doors", and "skylights".

Cost Impact: This proposal will not increase the cost of construction.

RE173-13

Public Hearing:	Committee:	AS	AM	D
	Assembly:	ASF	AMF	DF

R405.5.2(1)T-EC-CULP.DOC

RE174-13
Table R405.5.2(1) (IRC Table N1105.5.2(1))

Proponent: Brian Dean, Energy Efficient Codes Coalition; Garrett Stone, Brickfield Burchette Ritts & Stone, PC; Jeff Harris, Alliance to Save Energy; Harry Misuriello, American Council for an Energy-Efficient Economy; and Bill Prindle, Energy Efficient Codes Coalition.

Revise table as follows:

TABLE R405.5.2(1) (N1105.5.2(1)
SPECIFICATION FOR THE STANDARD REFERENCE AND PROPOSED DESIGNS

Heating systems [f,g]	As proposed for all heating systems other than electric heating without a heat pump. Where the proposed design utilizes electric heating without a heat pump, the standard reference design shall be an air source heat pump with an efficiency rating equal to the minimum required by federal law for the geographic location where the equipment is installed . ~~meeting the requirements of Section R403 of the IECC—Commercial Provisions~~. Capacity: sized in accordance with Section R403.6	As proposed

(Portions of Table not shown remain unchanged)

Reason: The purpose of this code change is to clarify the code. This proposal clarifies the baseline for heating systems contained in the Standard Reference Design in the section R405 Simulated Performance Alternative as follows:

1. Where an electrical heating system in the proposed design is something other than a heat pump, the baseline is more clearly described as an "air source heat pump with an efficiency rating equal to the minimum required by Federal law for the geographic location where the equipment is installed." (See 10 C.F.R. 430.32). This language is more accurate than the current language, which attempts to refer to the commercial provisions of the IECC, which may not reflect the most current federal residential equipment standard and/or do not apply to most residential buildings.
2. For "all heating systems other than electric heating without a heat pump", the new proposed language removes any possible ambiguity in specifying that the baseline in the Standard Reference Design is the same as in the Proposed Design. This is consistent with the approach the code utilizes for all cooling and service water heating equipment as well, which was adopted first for the 2009 IECC. Use of the "as proposed" equipment in both the Standard Reference Design and the Proposed Design properly precludes any trade-off of mechanical equipment against other code requirements. This approach reflects the fact that the code cannot, under federal law, regulate the level of efficiency for most residential heating, cooling and hot water equipment, which is exclusively regulated by the federal government.

It is important to specify that the air source heat pump that is the baseline for all electric heating without a heat pump must meet the federal requirement for that location because it is likely that the federal minimums will improve and shift from a national efficiency requirement to a state- and region-based requirement in the years ahead. It also important to better clarify that for all other heating systems, that the Standard Reference Design is the same as the Proposed Design.

A summary of the reasons for the change in approach to equipment in the Standard Reference Design (and its effect on trade-offs) in the 2009 IECC will provide some helpful background when potential changes to these provisions in Table R405.5.2(1) are considered. Efficient heating, cooling, and water heating equipment is important in a well-designed energy efficient home. The treatment of equipment efficiency in building codes, however, is complicated, and historically has created a number of unintended consequences. The elimination of the equipment trade-off in the 2009 IECC closed a compliance loophole that had been used for many years to weaken the long-term effectiveness of the building thermal envelope. Higher efficiency equipment can be an important energy saver. However, Federal law preempts states and local jurisdictions from setting efficiency requirements any higher than the federal minimums (which typically lag behind common builder practice by years, even decades). By tying the hands

of states and local jurisdictions so that they may not set higher equipment efficiency requirements, federal law leaves a "trade-off gap" within any code that allows equipment trade-offs – a gap that has been exploited to install insufficient insulation and low-quality fenestration in houses nationwide for many years.

If the IECC specified particular efficiency levels for equipment in the Standard Reference Design in the performance path, the code could only specify inefficient equipment consistent with current federal minimum standards (e.g., 78 AFUE furnace, 13 SEER cooling equipment). By comparison, 96 AFUE or better furnaces and 16 SEER or better cooling equipment are readily available and utilized frequently. Any builder who would otherwise use this better equipment, typically because of utility incentives or consumer demand, is actually given a strong incentive to reduce the efficiency of insulation, windows or other measures in a trade-off.

This is the definition of a free-rider, and the home with better equipment and weaker envelope would use far more energy (and cost the homeowner more) over its lifetime than if the trade-off were not available. Thermal envelope components such as insulation have long useful lifetimes and are most cost-effective to install at initial construction. By comparison, equipment is often easy to upgrade at times of replacement and will need to be replaced several times over the lifetime of the building.

A simple example well illustrates the concept that the value of envelope measures over time is far greater than equipment measures that save comparable energy at the time of installation. Assume that two homes are built side-by-side, one with better equipment and one with better insulation, both using the same total energy for heating, cooling and water heating at the time of construction. Assume that the equipment is replaced in both homes after 15 years at the federal minimum standard in place at that time. After fifteen years, the first home will have new equipment with weaker insulation, while the second home will have the same new equipment but better insulation, thereby using less energy going forward. This situation could continue into the foreseeable future. In other words, after the first equipment replacement, the home with the better envelope would outperform the home with the better equipment, perhaps over what could be a 70 to 100+ year lifetime.

The U.S. Department of Energy recognized some of the benefits from elimination of the equipment trade-offs in its Final Determination on the 2009 IECC: "Because building envelopes have substantially longer lives than HVAC and/or water heating equipment, energy savings from envelope improvements may persist for many more years than comparable equipment improvements. Also, because high-efficiency equipment is already the predominant choice in many markets, disallowing envelope/equipment tradeoffs is likely to result in improved overall efficiency in many situations." 76 Fed. Reg. 42688, 42697 (Jul. 19, 2011) Congress also endorsed the 2009 IECC (with its elimination of the trade-offs) by reference in the 2009 American Recovery and Reinvestment Act, setting it as the starting point for state code adoption and implementation, and has spent billions of taxpayer dollars to encourage adoption and compliance activity. In little more than three years, more than half of the states have adopted an energy code (2009 IECC or better) without an equipment trade-off, saving substantial additional energy over the life of the homes covered by these codes.

Prior to the 2009 improvement, the amount of energy efficiency lost through equipment trade-off free-ridership was substantial. According to a comprehensive analysis by ICF International conducted when the trade-off was first eliminated in 2009, the efficiency impact of equipment at the federal minimum efficiency, versus more common equipment typically installed in the various climate zones, if allowed as a trade-off, was staggering (national weighted average savings):

- Upgrade to a 90 AFUE natural gas furnace = 7.0% free-rider tradeoff savings.
- Upgrade to a 16 SEER air conditioner = 3.9% free-rider tradeoff savings.
- Upgrade to a 9.0 HSPF heat pump = 5.8% free-rider tradeoff savings.
- Upgrade to a 0.82 EF hot water heater = 6.4% free-rider tradeoff savings.

Efforts made by some stakeholders to revert back to allowing equipment trade-offs in the 2012 IECC were rebuffed by the Code Development Committee and at the Final Action Hearing. There is simply no justification for altering the current treatment of equipment efficiencies in the Simulated Performance Alternative.

Cost Impact: The code change proposal will not increase the cost of construction.

RE174-13

Public Hearing:	Committee:	AS	AM	D
	Assembly:	ASF	AMF	DF

R405.5.2(1)T-EC-DEAN-HARRIS-MISURIELLO-PRINDLE-STONE.DOC

RE175-13
Table R405.5.2(1) (IRC Table N1105.5.2(1))

Proponent: Shirley Ellis, Energy Systems Laboratory, Texas A&M Engineering Experiment Station representing the Texas A&M University System Energy Systems Laboratory (shirleyellis@tamu.edu)

Revise as follows:

Table R405.5.2(1) (N1105.5.2(1))
SPECIFICATIONS FOR THE STANDARD REFERENCE AND PROPOSED DESIGNS

BUILDING COMPONENT	STANDARD REFERENCE DESIGN	PROPOSED DESIGN
Heating systems [f,g]	~~As proposed for other than electric heating without a heat pump. Where the proposed design utilizes electric heating without a heat pump the standard reference design shall be an air-source heat pump meeting the requirements of Section R403 of the IECC – Commercial Provisions.~~ Fuel type: same as proposed design Efficiencies: Electric: air-source heat pump with prevailing federal minimum efficiency Nonelectric furnaces: natural gas furnace with prevailing federal minimum efficiency Nonelectric boilers: natural gas boiler with prevailing federal minimum standards. Capacity: Sized in accordance with Section R403.6.	As proposed As proposed As proposed As proposed As proposed
Cooling systems [f, h]	~~As proposed~~ Fuel type: Electric Efficiency: in accordance with prevailing federal minimum standards Capacity: Sized in accordance with Section R403.6	As proposed As proposed

Service water Heating [f,g,h,i]	~~As proposed~~ Fuel type: same as proposed design Efficiency: in accordance with prevailing Federal minimum standards Use: gal/day = 30 + 10 × *Nbr* Tank temperature: 120°F ~~Use: same as proposed design~~	As proposed As proposed Same as standard reference Same as standard reference ~~gal/day = 30 + (10 x N_{br})~~

(Portions of table not shown remain unchanged)

Reason: Disallowing equipment tradeoffs violates the concept of minimum standards and restrict design flexibility. Removing the equipment efficiency tradeoff is decreasing the performance aspect of this section of the code and moving it closer the Total UA alternative. While increasing efficiency is important, it is equally necessary to not and to establish baseline, minimum requirements.

Utilizing equipment efficiency toward energy code compliance has been part of the energy code since the beginning as well as in beyond code programs, such as Energy Star and the National Green Building Standard (ICC 700). To **r**equire higher building performance levels and simultaneously take away the tools to achieve this goal is counterproductive.

Not allowing equipment efficiency in code compliance unnecessarily increases construction costs, discourages the use of newly evolving high-efficiency equipment and gives preferential treatment for the use of insulation and fenestration alternatives.

Cost Impact: The code change proposal will not increase the cost of construction.

RE175-13

Public Hearing:	Committee:	AS	AM	D
	Assembly:	ASF	AMF	DF

R405.5.2(1)T-EC-ELLIS.DOC

RE176-13

Table R405.5.2(1) (IRC Table N1105.5.2(1))

Proponent: Philip Fairey, Florida Solar Energy Center representing the Florida Solar Energy Center (pfairey@fsec.ucf.edu)

Revise as follows:

Table R405.5.2(1) (N1105.5.2(1)
SPECIFICATIONS FOR THE STANDARD REFERENCE AND PROPOSED DESIGNS

BUILDING COMPONENT	STANDARD REFERENCE DESIGN	PROPOSED DESIGN
Thermal distribution systems	Thermal distribution system location: Entirely within the conditioned space. Duct insulation: In accordance with Section R403.2.1. Thermal distribution system efficiency (DSE) of 0.88 shall be applied to both the heating and cooling system efficiencies for all systems.	Thermal distribution system location: As proposed Duct insulation: As proposed Thermal distribution system efficiency (DSE) shall be as tested in accordance with Section R403.2 or if not tested, as specified in Table R405.5.2(2) ~~if not tested~~. ~~Duct insulation shall be as proposed.~~

(Portions of Table not shown remain unchanged.)

Reason: Table R405.5.2(1) of the 2012 IECC does not contain a specification for the *Standard Reference Design* thermal distribution system. This proposal provides a specification consistent with that of the 2009 IECC but with greater specificity as to the location of the thermal distribution system and the insulation of the ductwork for the *Standard Reference Design*. Based on other provisions of the 2012 IECC, there are two allowed possibilities for thermal distribution systems:

1) Exterior to the conditioned space and tested to have thermal distribution system leakage equal to or less than 4 cfm per 100 square feet of conditioned floor area at a pressure difference of 25 Pascal across the entire thermal distribution system, or
2) Interior to the conditioned space and untested, having a default thermal distribution system efficiency of 0.88 in accordance with Table R405.5.2(2).

The first provision indicates that ducts are allowed outside the conditioned space only if their air leakage is limited to 4 cfm25 per 100 ft^2 of conditioned floor area. The second provision strongly indicates that the specification for the *Standard Reference Design* thermal distribution system should be as it is specified in the 2009 IECC – thermal distribution system efficiency (DSE) = 0.88. Of these two provisions, the second (DSE=0.88) is both more consistent across climates and more energy efficient. A simulation study using EnergyGauge USA and 1-story, 2000 ft^2, 3-bedroom homes that configured in accordance with the 2012 IECC *Standard Reference Design* specification has been conducted by the proponent. Seventeen TMY3 locations across all eight IECC climate zones are used to examine differences between the two allowed thermal distribution system configurations. Table A presents results for the total energy use for space heating, cooling and mechanical ventilation (in accordance with the 2012 IMC) from these simulations. The data show that DSE = 0.88 is the more energy efficient of the two alternatives. For homes using natural gas heating, the differences in source energy use are relatively small but for a number of the all-electric home configurations (heat pump heating and cooling) the differences are significant. Based on these data it is highly recommended that the 2015 IECC *Standard Reference Design* Thermal distribution system specification be as proposed above.

Table A. Total Space Heating, Cooling and Mechanical Ventilation Energy Use

CZ	Location	DSE=0.88; Ducts in Cond. Sp.			Qn=0.04; Ducts in Attic			Difference (Qn - DSE)		
		kWh	Therms	Source MBtu	kWh	Therms	Source MBtu	kWh	Therms	Source MBtu
1A	Miami, FL	3104		35.64	4204		48.27	1100		12.63
2A	Orlando, FL	2340		26.87	2730		31.34	390		4.48
2A	Houston, TX	2989		34.32	3548		40.74	559		6.42

2B	Phoenix, AZ	4824		55.39	5132		58.92	308		3.54
3A	Charleston, SC	4153		47.68	5230		60.05	1077		12.37
3A	Charlotte, NC	2050	262	26.40	2055	297	26.84	5	35	0.44
3A	Oklahoma City, OK	2747	396	35.86	2662	441	35.38	-85	45	-0.48
3B	Las Vegas, NV	3448	152	41.25	3357	165	40.34	-91	13	-0.90
4A	Baltimore, MD	1865	397	25.75	1859	447	26.23	-6	50	0.48
4A	Kansas City, KS	2131	503	29.96	2064	581	30.04	-67	78	0.08
4C	Seattle, WA	3659		42.01	5432		62.37	1773		20.36
5A	Chicago, IL	1357	525	21.31	1336	606	21.96	-21	81	0.64
5B	Denver, CO	1036	351	15.73	1083	402	16.82	47	51	1.10
6A	Minneapolis, MN	1280	635	21.63	1261	750	22.67	-19	115	1.04
6B	Billings, MT	987	484	16.62	995	562	17.56	8	78	0.94
7A	Fargo, ND	1208	788	22.47	1175	957	23.94	-33	169	1.47
8	Fairbanks, AK	1262	1234	27.96	1163	1560	30.39	-99	326	2.42

Cost Impact: The code change proposal will not increase the cost of construction.

RE176-13

Public Hearing: Committee: AS AM D
Assembly: ASF AMF DF

R405.5.2(1)T-EC-FAIREY

RE177-13
Table R405.5.2(1) (IRC Table N1105.5.2(1))

Proponent: Mark Halverson, APA-The Engineered Wood Association & Loren Ross, The American Wood Council. (help@apawood.org)

Revise as follows:

TABLE R405.5.2(1) (N1105.5.2(1)
SPECIFICATIONS FOR THE STANDARD REFERENCE AND PROPOSED DESIGNS

BUILDING COMPONENT	STANDARD REFERENCE DESIGN	PROPOSED DESIGN
Glazing [a]	Total area[b] = ~~(a) The proposed fenestration area; where the proposed fenestration area is less than 15% of the conditioned floor area.~~ ~~(b)~~ 15% of the conditioned floor area~~; where the proposed fenestration area is 15% or more of the conditioned floor area.~~	As proposed
	Orientation: equally distributed to four cardinal compass orientations (N, E, S & W).	As proposed
	U-factor: from Table 402.1.3	As proposed
	SHGC: From Table 402.1.1 except that for climates with no requirement (NR) SHGC = 0.40 shall be used.	As proposed
	Interior shade fraction: 0.92-(0.21 x SHGC for the standard reference design)	0.92-(0.21 x SHGC as proposed)
	External shading: none	As proposed

(Portions of Table not shown remain unchanged)

Reason: The greatest thermal break in our wall systems is glazing. While glazing areas greater than 15% of the floor area are penalized for reduced energy efficiency, glazing areas less than 15% are not recognized for increasing energy efficiency. Homes with a lower percentage of windows and doors generally perform better than the code minimum (15%); therefore, these homes should get credit for the additional energy efficiency. This will enhance the readability of the code while making it easier to understand, more equitable, and provide flexibility to builders and architects.

Every avenue must be explored when elevating energy code efficiency to the next level, and this offers an efficiency increase that has not yet been recognized in the code.

We ask the support of the committee for this proposal.

Cost Impact: The code change proposal will not increase the cost of construction.

RE177-13

Public Hearing:	Committee:	AS	AM	D
	Assembly:	ASF	AMF	DF

R405.5.2(1)T-EC-HAVERSON-ROSS.DOC

RE178-13

Table R405.5.2(1) (IRC Table N1105.5.2(1)).

Proponent: Tom Kositzky, Coalition for Fair Energy Codes. info@fairenergycodes.org

Revise as follows:

TABLE R405.5.2(1) (N1105.5.2(1))
SPECIFICATIONS FOR THE STANDARD REFERENCE AND PROPOSED DESIGNS

BUILDING COMPONENT	STANDARD REFERENCE DESIGN	PROPOSED DESIGN
Heating systems [f,g]	~~As proposed for other than electric heating without a heat pump. Where the proposed design utilizes electric heating without a heat pump the standard reference design shall be an air source heat pump meeting the requirements of Section R403 of the IECC – Commercial Provisions.~~ Fuel type: same as proposed design Efficiencies: Electric: Air-source heat pump in accordance with prevailing federal minimum efficiency standards Nonelectric furnaces: natural gas furnace in accordance with prevailing federal minimum efficiency standards Nonelectric boilers: Boiler in accordance with prevailing federal minimum efficiency standards. Capacity: Sized in accordance with Section R403.6.	As proposed As proposed As proposed As proposed
Cooling systems [f, h]	~~As proposed~~ Fuel type: Electric Efficiency: In accordance with prevailing federal minimum efficiency standards Capacity: sized in accordance with Section R403.6	As proposed As proposed

Service water Heating [f,g,h,j]	~~As proposed~~ Fuel type: same as proposed design Efficiency: in accordance with prevailing Federal minimum efficiency standards Use: same as proposed design Same as Proposed design	 As proposed As proposed Use: gal/day = 30 + (10 × N_{br}) N_{br} = *Number of bedrooms* Tank temperature: 120°F

(Portions of Table not shown remain unchanged)

Reason: The purpose of this code change proposal is to reestablish the allowance of equipment efficiency tradeoffs. National model building codes are widely accepted as the minimum requirements for compliance. Disallowing tradeoffs of this nature increases the difficulty for all stakeholders with regards to compliance with increasingly more restrictive energy codes. Increasing energy efficiency is important and it is equally necessary to allow design flexibility and establish baseline, minimum requirements.

Utilizing equipment efficiency toward energy code compliance has been part of the energy code since the inception of the IECC. Although the energy neutral tradeoffs were unfortunately removed from the performance path in Chapter 4 in the 2009 IECC, they are still ingrained in the Preface of the IECC. Equipment efficiencies are a part of Chapter 5 of the IECC as well as in beyond code programs, including Energy Star, DOE's Builders Challenge and the National Green Building Standard (ICC 700). It is counterproductive and less efficient to require higher building performance levels and simultaneously take away the means to achieve this goal.

The disallowance of equipment efficiency in code compliance unnecessarily increases construction costs, discourages the use of newly evolving high-efficiency equipment, and gives preferential treatment for the use of insulation and fenestration alternatives.

Energy neutral equipment efficiency considerations must be returned to the energy code in order to provide flexibility and cost-effective methods to achieve an energy efficient home.

We ask the support of the committee for this proposal.

Cost Impact: The code change proposal will not increase the cost of construction.

RE178-13

Public Hearing:	Committee:	AS	AM	D
	Assembly:	ASF	AMF	DF

R405.5.2(1)T-EC-KOSITZKY.DOC

RE179-13

Table R405.5.2(1) (IRC Table N1105.5.2(1)), Table R405.5.2(3) (NEW) (IRC Table N1105.5.2(3) (NEW)), Chapter 5

Proponent: Neil Leslie, Gas Technology Institute representing self (Neil.Leslie@gastechnology.org)

Revise as follows:

Table R405.5.2(1) (N1105.5.2(1))
SPECIFICATION FOR THE STANDARD REFERENCE AND PROPOSED DESIGNS

BUILDING COMPONENT	STANDARD REFERENCE DESIGN	PROPOSED DESIGN
Heating systems[f ~~, g~~]	~~As proposed for other than electric heating without a heat pump. Where the proposed design utilizes electric heating without a heat pump the standard reference design shall be an air source heat pump meeting the requirements of Section R403 of the IECC—Commercial Provisions.~~ Equipment type: in accordance with Table R405.5.2(3) Efficiency: in accordance wtih Table C403.2.3 (4) Capacity: sized in accordance with Section R403.6	 As proposed As proposed
Cooling systems[f, ~~h, g~~]	~~As proposed~~ Equipment type: in accordance Table R405.5.2(3) Efficiency: in accordance with Table C403.2.3(1) Capacity: sized in accordance with Section R403.6.	 As proposed As proposed
Service water heating[f,~~g,h,i~~]	~~As proposed~~ ~~Use: same as proposed~~ Equipment type: in accordance with Table R405.5.2(3) Efficiency: in accordance with Table C404.2 Capacity: same as proposed	 As proposed As proposed gal/day=30 + (10 × N_{br}) N_{br} = Number of bedrooms

(Portions of table not shown remain unchanged)

~~f. For a proposed design with multiple heating, cooling or water heating systems using different fuel types, the applicable standard reference design system capacities and fuel types shall be weighted in accordance with their respective loads as calculated by accepted engineering practice for each equipment and fuel type present.~~
f ~~g~~. For a proposed design without a proposed heating system, a heating system with the prevailing federal minimum efficiency shall be assumed for both the standard reference design and proposed design.
g ~~h~~. For a proposed design home without a proposed cooling system, an electric air conditioner with the prevailing federal minimum efficiency shall be assumed for both the standard reference design and the proposed design.

~~i. For a proposed design with a nonstorage-type water heater, a 40-gallon storage-type water heater with the prevailing federal minimum energy factor for the same fuel as the predominant heating fuel type shall be assumed. For the case of a proposed design without a proposed water heater, a 40-gallon storage-type water heater with the prevailing federal minimum efficiency for the same fuel as the predominant heating fuel type shall be assumed for both the proposed design and standard reference design.~~

TABLE R405.5.2(3) (N1105.5.2(3))
EQUIPMENT MAP

SYSTEM	EQUIPMENT TYPE
Heating[a]	Warm air furnaces, natural gas fired
Cooling[a]	Air conditioners, air cooled
Service Water Heating[a]	Storage water heaters, natural gas

a. Systems meeting current National Appliance Energy Conservation Act minimum efficiency requirements.

Add new standard to Chapter 5 as follows:

DOE U.S Department of Energy
c/o Superintendent of Documents
U.S. Government Printing Office
Washington, D.C 20402-9325

NAECA 87-(88) National Appliance Energy Conservation Act 1987 [Public Law 100-12 (with Amendments of 1988-P.L. 100-357)]

Reason: The intent of the IECC is clearly defined.

> **"Intent.** This code shall regulate the design and construction of buildings for the effective use and conservation of energy over the useful life of each building. This code is intended to provide flexibility to permit the use of innovative approaches and techniques to achieve this objective. This code is not intended to abridge safety, health or environmental requirements contained in other applicable codes or ordinances."
>
> Source: 2012 IECC. Sections C101.3 and R101.3.

The code focus is "energy use… over the useful life of the building". Buildings will perform to the requirements of this code for a long time. So the intent of the code focuses on "energy use" over the life of the building. Under the performance path, the IECC compares the energy use of a baseline building to the energy use of a proposed building.

This proposal addresses a lingering weakness in the code for those seeking to use innovative energy efficient systems. Simulations provide the means and methods to more fully understand, quantify and model actual energy use, whatever its form. This revision specifies a single standard reference design for heating, cooling, and service water heating systems, using technologies with low energy costs and high source energy efficiency as the baseline in each building component category.

The revised text and tables:

- Establish a single baseline building performance requirement
  - for all service hot water (SHW) and HVAC systems
  - independent of making the system choice for the proposed building
  - at a realistic and achievable level using code-compliant technologies.
- Addresses the inconsistent mix of multiple prescriptive baseline building technology performance requirements in the current standard.
- Provides equitable and consistent treatment of all SHW and HVAC system options, including conventional, renewable energy, hybrid technology, and waste heat recovery options.
- Is indifferent to the SHW and HVAC system choice in the proposed building, comparing all SHW and HVAC system options against a single energy efficient baseline building energy cost or source energy performance requirement.
- Aligns the SHW and HVAC system performance requirement methodology with the envelope single baseline performance requirement methodology.
- Achieves the goal of reducing the site energy cost, consumption of primary energy resources, and global greenhouse gas emissions related to the operation of the building in a cost-effective and equitable manner.

A single technology-blind baseline performance requirement is the most technically defensible methodology for performance path calculations, and it is critical for equitable implementation of the IECC Performance Alternative requirements Section R405. Shifting to a single baseline design provides an equitable credit to all technologies that have lower annual energy costs or source energy consumption compared to the single baseline level irrespective of energy form or technology design.

The current code structure does not facilitate equitable comparison of mechanical systems based energy cost or source energy consumption.

IECC Section R405 currently uses multiple baseline mechanical system performance requirements. The mechanical systems are compared using multiple baselines by separating both categories of equipment and fuel types used within each equipment category. For example, the current code has 14 different baseline configurations across the five SHW system categories that may be relevant to the residential sector, none of which results in the same annual energy cost or source energy budget for performance path calculations. This mix of equivalencies is a counter-productive and inconsistent approach that can be mitigated by shifting to a single baseline building design for all proposed building design alternatives. The existing Section R405 also may be subject to various interpretations on the appropriate baseline design building for advanced multi-fuel appliance options, waste heat recovery options, or emerging technologies that reduce energy costs or source energy consumption significantly compared to options that currently qualify.

The baseline mechanical systems in the revised Table R405 use a single efficient baseline design for all proposed building configurations. The revised Table R405.5.2(1) and additional Table R405.5.2(3) apply a single baseline energy cost requirement consistently to any proposed mechanical system. The baseline does not prohibit any technology options. It correctly allows all options, including higher operating cost options, but considers their strong energy cost or source energy consumption disadvantages compared to the single baseline performance requirement. A designer who chooses a higher energy cost or source energy consumption option for the proposed building would only need to reduce the overall building energy cost or source energy consumption to the baseline level, and could do so through any combination of improved energy performance options, including HVAC, SHW, and envelope improvements.

The existing HVAC and SHW provisions are also inconsistent with standard reference baseline design criteria for envelope building components. Those building element provisions do not prescribe specific technology categories or subcategories, but are true performance based requirements (e.g., envelope requirements in overall U value) that give the designer maximum flexibility BEFORE making technology choices in the design. The designer is free to choose the most cost-effective envelope technology (fiberglass, polyurethane foam) to meet the single energy target for the building without arbitrary technology class prescriptive requirements for fiberglass or foam insulation. Unfortunately, the existing provisions of HVAC and SHW tables impose technology category and subcategory prescriptive requirements when using the performance path instead of true performance-based requirements. The impact is to establish the reference design building AFTER prescriptive technology category and energy design choices are made. This is an inequitable application of prescriptive requirements in the performance path. This constraint eliminates the credit for creative design choices that would significantly reduce energy cost, primary energy use, and greenhouse gas emissions.

The revised tables and text completely decouple the proposed building design choices from the standard reference design building's energy cost or source energy performance requirement. The reference energy and technology choices in the revised section were selected to provide a practical and effective requirement to meet the intent of the standard while still offering appropriate incentives for the best available technologies based on their energy cost benefits. Encouraging rather than discouraging this design flexibility aligns closely with the IECC stated goal of reducing energy costs by 30 percent compared to the 2012 version.

Cost Impact: The code change proposal will not increase the cost of construction.

RE179-13

Public Hearing:	Committee:	AS	AM	D
	Assembly:	ASF	AMF	DF

R405.5.2(1)T-EC-LESLIE.DOC

RE180-13
Table R405.5.2(1) (IRC Table N1105.5.2(1))

Proponent: Mark Nowak, M Nowak Consulting LLC representing the Steel Framing Alliance

Revise as follows:

TABLE R405.5.2(1) (N1105.5.2(1))
SPECIFICATIONS FOR THE STANDARD REFERENCE AND PROPOSED DESIGNS

BUILDING COMPONENT	STANDARD REFERENCE DESIGN	PROPOSED DESIGN
Heating systems[f, g]	~~As proposed for other than electric heating without a heat pump.~~ Where the proposed design utilizes electric heating without a heat pump the standard reference design shall be an air source heat pump ~~meeting the requirements of Section R403 of the IECC—Commercial Provisions.~~ Efficiency: In accordance with prevailing federal minimum standards Capacity: sized in accordance with Section R403.6 Fuel type: same as proposed	As proposed As proposed As proposed
Cooling systems[f, h]	~~As proposed~~ Capacity: sized in accordance with Section R403.6. Efficiency: In accordance with prevailing federal minimum standards	As proposed As proposed
Service water heating[f, g, h, i]	~~As proposed~~ Use: same as proposed design Efficiency: In accordance with prevailing federal minimum standards	~~As proposed~~ gal/day = 30 + (10 × N_{br}) N_{br} = number of bedrooms As proposed

(Portions of the Table not shown remain unchanged.)

Reason This proposal restores equipment efficiency as a variable in the simulated performance alternative of the IECC, consistent with the code prior to the 2009 edition In the past, resistance to similar proposals to restore this language have been based partly on an argument that this somehow weakens the code. This proposal does not decrease the level of performance required of

buildings but offers the designer or builder the opportunity to design the building in the most cost effective manner. They will still be required to meet the same level of overall performance as for a building complying prescriptively.

Cost Impact: The code change proposal will not increase the cost of construction.

RE180-13

Public Hearing:	Committee:	AS	AM	D
	Assembly:	ASF	AMF	DF

R405.5.2(1)T-EC-NOWAK.DOC

RE181-13
Table R405.5.2(1) (IRC N1105.5.2(1))

Proponent: Jeff Sonne, Florida Solar Energy Center representing the Florida Solar Energy Center (jeff@fsec.ucf.edu)

Revise as follows:

TABLE R405.5.2(1) (N1105.5.2(1))
SPECIFICATIONS FOR THE STANDARD REFERENCE AND PROPOSED DESIGNS

BUILDING COMPONENT	STANDARD REFERENCE DESIGN	PROPOSED DESIGN
Glazing[a]	Total area[b] = ~~(a) The proposed glazing area; where proposed glazing area is less than 15% of the conditioned floor area.~~ ~~(b)~~ 15% of the conditioned floor area~~; where the proposed glazing area is 15% or more of the conditioned floor area.~~	As proposed
	Orientation: equally distributed to four cardinal compass orientations (N, E, S & W).	As proposed
	U-factor: from Table R402.1.3	As proposed
	SHGC: From Table R402.1.1 except that for climates with no requirement (NR) SHGC = 0.40 shall be used. Interior shade fraction: ~~0.92-(0.21 × SHGC for the standard reference design)~~	As proposed ~~0.92-(0.21 × SHGC as proposed)~~
	Summer: 0.70	Same as Standard Reference Design
	Winter: 0.85	Same as Standard Reference Design
	External shading: none	As proposed

(Portions of Table not shown remain unchanged)

Reason:

Glazing Area

Glazed areas are the least efficient and most costly components of homes. Even the best windows and glass doors admit much more solar heat gain than walls, roofs and floors. And even the best windows and doors have thermal conductances that are far inferior to walls, roofs and floors.

Table 1 below presents the 2012 IECC requirements for envelope components in IECC climate zone 2. While there are no IECC requirements for the SHGC of opaque envelope components like walls, ceilings and floors, an equivalent SHGC can be calculated using the component U-Factor, a reasonable sol-air temperature, a reasonable interior temperature (75 ^{o}F) and a reasonable incident solar radiation, as follows:

$$SHGC_{equiv} = U\text{-}Factor*(T_{sol\text{-}air} - T_{int}) / (Solar_{Incident})$$

For Table 1, the assumed sol-air temperatures were 140 ^{o}F for walls and 160 ^{o}F for roofs (ceilings) and the assumed incident solar radiation was 250 Btu/h for walls and 300 Btu/h for roofs (ceilings). Floors receive no solar radiation and thus do not experience heat gains due to
direct solar radiation as do fenestration, walls and roofs (ceilings).

Table 1. Envelope Component Efficacies

Envelope Component	IECC* U-Factor	U-Factor Ratio	IECC* SHGC	SHGC Ratio
Fenestration	0.400	1.00	0.250	1.00
Frame walls	0.082	4.88	0.021**	11.73
Mass walls	0.165	2.42	0.043**	5.83
Ceilings	0.030	13.33	0.009**	29.41
Floors	0.064	6.25	0.000**	∞

* IECC U-Factor and SHGC values for Climate Zone 2
** Computed estimate

The U-Factor and SHGC ratios in Table 1 compare the heat retardation efficacy of each of the other envelope components to the heat retardation efficacy of fenestrations. These ratios show that the opaque envelope components are 2.42 to 13.33 times as efficacious in retarding heat flow by conductance as fenestrations and 5.83 to 29.41 times as efficacious in retarding solar heat gains as fenestrations.

Per unit area, fenestrations are also the most expensive envelope components in new homes. Estimates from the 2011 R.S. Means Residential Cost Data show typical code compliant concrete block wall construction prices to be about $15/ft^2 while typical code compliant window prices are somewhat more than double this amount, at about $32/ft^2.

The data show that fenestrations are relatively costly home amenities, which are not particularly energy efficient compared with other envelope components. The principle function of fenestration is to visually bring the outdoors into the comfort conditioned interior living space. Thus, cost is the principle determinant of fenestration area as a percentage of conditioned floor area, with larger fenestration percentages much more likely in high-end, expensive homes than in low-end, smaller homes.

Reductions in glazing area improve the energy performance of homes. If homes are evaluated on an energy performance basis then, all other things being equal, the home with the smaller window area will have less energy consumption. That being the case, a simulated performance alternative should recognize this smaller energy consumption rather than adjust the Standard Reference Design glazing area such that this smaller energy use is effectively disallowed as an energy performance characteristic of the home.

Most homes that choose smaller fenestration area are small, low-cost homes. Thus, the choice to incorporate less fenestration area is an economic decision – made to reduce the cost of the home. The fact that these homes are smaller than the typical new home also significantly reduces the energy use of the home compared to the more typical larger new home. As a result, this “sliding” glazing area in the 2012 IECC Standard Reference Design actually requires the smaller, low-cost home with less window area to meet a higher energy performance standard than the larger more energy intensive typical home. This constitutes a strong affirmation of the old saw that “no good deed shall go unpunished.”

For reasons of cost effectiveness and the equitable treatment of smaller, low-cost homes, the Code should set a single standard for glazing area in the Standard Reference Design and not allow it to “float down” with the window area of the Proposed Design.

Interior Shading Coefficient

The 2012 IECC modifies the interior shading coefficient of fenestrations as a function of the SHGC of the fenestration. It does this in both the Standard Reference Design and the Proposed Design. The equation for the 2012 IECC interior shading coefficient is as follows:

$$\text{Interior Shade} = 0.92 * (0.21*\text{SHGC})$$

Compared with the 2009 IECC interior shading coefficients, which were not dependent on the SHGC of the fenestration but were based on the likely behavior of the home occupants, this equation effectively penalizes high performance windows in climates like Florida where lower SHGCs are desirable. The equation shows that the better the SHGC (lower is better in Florida), the lower the interior shading coefficient. Thus, a window with a SHGC of 0.5 would have an interior shading coefficient of 0.82 while a window with a SHGC of 0.2 would have an interior shading coefficient of 0.88. This results in the poorer performing window getting more energy performance credit from interior shading than the better performing window.

Table 2 examines how the change from the 2009 IECC interior shading coefficients to the 2012 IECC interior shading coefficients impact projected performance. A 2-story, 2400 ft^2, slab-on-grade frame wall IECC 2012 Standard Reference Design home is used for both sets of simulations. The only change is the manner in which interior shading is treated. The values in the table are the annual kWh for heating and cooling in the cities specified.

Table 2. H&C Interior Shading Example

Condition	Miami	Orlando	Tally
IECC 2009	4981	3507	3426
IECC 2012	5237	3685	3579
kWh change	256	178	153
% change	5.1%	5.1%	4.5%

Table 2 shows that these high performance (SHGC-0.25) windows show 4.5% - 5.1% greater energy use for the IECC 2012 interior shading coefficient specification than for the 2009 IECC interior shading coefficient specification. This means that these high-performance windows will achieve less energy performance credit using the 2012 IECC specification that they do using the 2009 IECC specification. Surely this was not the intent of the 2012 change to the IECC interior shading coefficient.

In addition to the performance differences shown in Table 2, the 2012 IECC interior shading coefficients also do not reflect the likely behavior of the occupants. Occupants are more likely to use shades and blinds principally for privacy reasons but are also likely to use somewhat more shades and blinds during the air conditioning season to keep the sun out of the living space and use

somewhat less shades and blinds during the heating season to let the sun into the living space. This occupant behavior is reflected in the 2009 IECC interior shading coefficient specification but abandoned for unknown reasons in the 2012 IECC interior shading coefficient specification.

Based on this analysis, the proponent recommends that the IECC set a single, non-floating window area to conditioned floor area ratio of 15% for the Standard Reference Design and that the IECC 2009 specification for interior shading coefficient be maintained for both the Standard Reference Design and the Proposed Design.

Cost Impact: The code change proposal will not increase the cost of construction.

RE181-13

Public Hearing:	Committee:	AS	AM	D
	Assembly:	ASF	AMF	DF

R405.5.2(1)T-EC-SONNE.DOC

RE182-13

Table R405.5.2(1) (IRC Table N1105.5.2(1))

Proponent: Brenda A. Thompson, Clark County Development Services, Las Vegas NV, representing ICC Sustainability, Energy & High Performance Building Code Action Committee (bat@clarkcounty.gov)

Revise as follows:

TABLE R405.5.2(1) (N1105.5.2(1))
SPECIFICATIONS FOR THE STANDARD REFERENCE AND PROPOSED DESIGNS

BUILDING COMPONENT	STANDARD REFERENCE DESIGN	PROPOSED DESIGN
Heating systems[f,g]	~~As proposed for other than electric heating without a heat pump.~~ ~~Where the proposed design utilizes electric heating without a heat pump the standard reference design shall be an air source heat pump meeting the requirements of Section R403 of the IECC—Commercial Provisions.~~ Fuel type: same as proposed design Efficiencies: Electric: Air-source heat pump in accordance with prevailing federal minimum efficiency standards Non-electric furnaces: Furnace in accordance with prevailing federal or regional minimum efficiency standards Non-electric boilers: Boiler in accordance with prevailing federal minimum efficiency standards Capacity: sized in accordance with Section R403.6.	As proposed As proposed As proposed As proposed
Cooling system[f,h]	~~As proposed~~ Fuel type: Electric Efficiency: In accordance with prevailing federal minimum efficiency standards Capacity: sized in accordance with Section R403.6.	As proposed As proposed

Service Water Heating[f,g,h,i]	~~As proposed~~ Fuel type: same as proposed design Efficiency: in accordance with prevailing federal minimum efficiency standards Use: Same as proposed design Same as proposed design	 As proposed As proposed Use: gal/day = 30 + (10 × N_{br}) N_{br}= Number of bedrooms Tank temperature: 120°F

(Portions of Table not shown remain unchanged)

Reason: This proposal was submitted by the ICC Sustainability Energy and High Performance Code Action Committee (SEHPCAC). The SEHPCAC was established by the ICC Board of Directors to pursue opportunities to improve and enhance assigned International Codes or portion thereof. This includes both the technical aspects of the codes as well as the code content in terms of scope and application of referenced standards. Since its inception in July, 2011, the SEHPCAC has held 3 open meetings and over 30 workgroup calls which included members of the SEHPCAC as well as any interested party to discuss and debate proposed changes and public comments. Related documentation and reports are posted on the SEHPCAC website at: http://www.iccsafe.org/cs/SEHPCAC/Pages/default.aspx.

Reasons for this specific proposal:

The ability to include high efficiency mechanical equipment in the performance path was removed in the 2009 IECC. However, this is counter to the entire premise of the performance path, which is to allow flexibility to use any number of different means to achieve the same level of energy performance. This limits adaptability for local circumstances and alternative designs, and also discourages integrated design and use of innovative new HVAC and hot water technologies. It is also in contrast with every other building energy code, standard, and green program. As a result, this issue has encountered resistance from a diverse group of academics, builders, building officials, and industry representatives, and in some cases, has hindered local adoption of the code.

One of the primary reasons that equipment trade-offs were removed was that the federal minimum equipment efficiencies were lagging in the market. Specifically, there were concerns that builders were taking credit for putting in a high efficiency condensing furnace over the old baseline 78 AFUE furnaces, although the large majority of the northern market was already using condensing furnaces – so they were getting "free" credit for something they would have done anyway. However, new federal standards will take effect between May 1, 2013 and January 1, 2015 that will upgrade equipment efficiencies, including addressing this specific example by setting a new baseline that will require condensing furnaces in the north.

Therefore, this proposal would reinstate the ability to include high efficiency heating, cooling, and service water heating equipment in the performance path, using similar language as was previously in the 2006 IECC but using the new minimum equipment efficiency standards.

Cost impact: None, or decrease in cost by enabling whole building design to optimize cost and energy efficiency.

RE182-13

Public Hearing:	Committee:	AS	AM	D
	Assembly:	ASF	AMF	DF

R405.5.2(1)T-EC-THOMPSON-SEHPCAC.DOC

RE183 – 13

R401.2 (IRC N1101.15), R401.3 (IRC N1101.16), R402.1 (IRC N1102.1), R402.2 (IRC N1102.2), R402.3 (IRC N1102.3), R402.4 (IRC N1102.4), R402.5 (IRC N1102.5), R403.1 (IRC N1103.1), R403.1.2 (IRC N1103.1.2), R403.2.1 (IRC N1103.2.1), R403.2.2 (IRC N1103.2.2), R403.2.3 (N1103.2.3), R403.3 (IRC N1103.3), R403.4 (IRC N1103.4), R403.5 (IRC N1103.5), R403.6 (IRC N1103.6), R403.7 (IRC N1103.7), R403.8 (IRC N1103.8), R403.9 (IRC N1103.9), R404 (IRC N1104), R404.1 (IRC N1104.1), R404.1.1 (IRC N1104.1.1), R405 (IRC N1105), R405.2 (IRC N1105.2)

Proponent: Craig Conner, Building Quality, representing self (craig.conner@mac.com)

Revise as follows:

R401.2 (N1101.15) Compliance. ~~Projects shall comply with Sections identified as "mandatory" and with either sections identified as "prescriptive" or the performance approach in Section R405.:~~ Compliance shall be demonstrated by meeting the applicable provisions of this chapter.

R401.3 (N1101.16) Certificate. ~~(Mandatory)~~ (Prescriptive). *(Portions of text not shown remains unchanged)*

R402.1 (N1102.1) General. ~~(Prescriptive).~~ *(Portions of text not shown remains unchanged)*

R402.2 (N1102.2) Specific insulation requirements. ~~(Prescriptive)~~ *(Portions of text not shown remains unchanged)*

R402.3 (N1102.3) Fenestration. ~~(Prescriptive)~~ *(Portions of text not shown remains unchanged)*

R402.4 (N1102.4) Air leakage. ~~(Mandatory)~~ *(Portions of text not shown remains unchanged)*

R402.5 (N1102.5) Maximum fenestration *U*-factor and SHGC. ~~(Mandatory).~~ *(Portions of text not shown remains unchanged)*

R403.1 (N1103.1) Controls. ~~(Mandatory)~~ *(Portions of text not shown remains unchanged)*

R403.1.2 (N1103.1.2) Heat pump supplementary heat. ~~(Mandatory)~~ *(Portions of text not shown remains unchanged)*

R403.2.1 (N1103.2.1) Insulation. ~~(Prescriptive)~~ *(Portions of text not shown remains unchanged)*

R403.2.2 (N1103.2.2) Sealing. ~~(Mandatory)~~ *(Portions of text not shown remains unchanged)*

R403.2.3 (N1103.2.3) Building cavities. ~~(Mandatory)~~ *(Portions of text not shown remains unchanged)*

R403.3 (N1103.3) Mechanical system piping insulation. ~~(Mandatory)~~ *(Portions of text not shown remains unchanged)*

R403.5 (N1103.5) Mechanical ventilation. ~~(Mandatory)~~ *(Portions of text not shown remains unchanged)*

R403.6 (N1103.6) Equipment sizing. ~~(Mandatory)~~ *(Portions of text not shown remains unchanged)*

R403.7 (N1103.7) Systems serving multiple dwelling units. **~~(Mandatory)~~** *(Portions of text not shown remains unchanged)*

R403.8 (N1103.8) Snow melt system controls. ~~(Mandatory)~~ *(Portions of text not shown remains unchanged)*

R403.9 (N1103.9) Pools and inground permanently installed spas. ~~**(Mandatory)**~~ *(Portions of text not shown remains unchanged)*

SECTION R404 (N1104)
ELECTRICAL POWER AND LIGHTING SYSTEMS
~~**(MANDATORY)**~~

R404.1 (N1104.1) Lighting equipment ~~**(Mandatory).**~~ *(Portions of text not shown remains unchanged)*

R404.1.1 (N1104.1.1) Lighting equipment ~~**(Mandatory).**~~ *(Portions of text not shown remains unchanged)*

SECTION R405 (N1105)
SIMULATED PERFORMANCE ALTERNATIVE
~~**(Performance)**~~

R405.2 (N1105.2) Mandatory requirements. Compliance with this Section requires that ~~the mandatory provisions identified in Section R401.2 be met~~ projects comply with Sections R401.3, R402.4, R402.5, R403.1, R403.2.2, R403.2.3, R403.4 through R403.9, and R404. ~~All~~ Supply and return ducts not completely inside the building thermal envelope shall be insulated to a minimum of R-6.

Reason: This change corrects the erroneous use of the term "*mandatory*". This moves the specification of what can be traded off with the performance approach into the code text about the performance approach, rather than spreading that information throughout the code, as was in energy codes prior to 2006.

The word "*shall*" and the concept of "*mandatory*" is woven throughout the I-codes. It is important that the energy code use "shall" correctly. The IRC definition is

***SHALL**. The term, when used in this code, is construed to mean "mandatory".*

Since the IECC inherits the IRC definitions, IECC use of "*shall*" implies "*mandatory*". Implying sections with the word "*prescriptive*" is not "*mandatory*" is at the very least confusing, if not wrong.

Why are these labels even in the IECC? The "*prescriptive*" and "*mandatory* labels are intended separate what could from what could not be traded off in the performance path. A simpler and clearer way approach is to list what the performance section is applicable to in the performance section itself. Section R405 (Performance) already has a subsection defining what the performance approach applies to (currently titled "Mandatory Requirements").

The existing code incorrectly lists some requirements as "prescriptive", meaning they can be traded off under the performance approach. Requirements incorrectly listed as "tradable" include eve baffle R402.2.3, the definition of "mass walls" R402.2.5, installing insulation to be permanently attached in the floor and crawlspace (Sections 402.2.7 and 402.2.10), and the crawl space vapor retarder (Section 402.2.9). Permanent attachment of the insulation and important vapor retarders should not be traded away in a performance calculation. This change corrects the items incorrectly labeled as tradable.

This change moves the list of requirements that cannot be traded into a single location in the performance section. It removes over 20 instances unnecessary and confusing uses of "*mandatory*", "*prescriptive*" and "*performance*" from section and subsection heading, and corrects errors in labeling requirements that can be traded; all without any change to section or subsection content.

Cost Impact: The code change proposal will not increase the cost of construction.

RE183-13

Public Hearing:	Committee:	AS	AM	D
	Assembly:	ASF	AMF	DF

R401.2-EC-CONNER.doc

RE184 – 13
R101.4.3, R202, R406 (NEW), (IRC N1101. 3, N1101.9, N1106(NEW))

Proponent: Eric Makela, Britt Makela Group, Inc., representing Institute for Market Transformation (eric@brittmakela.com), Ryan Meres, Institute for Market Transformation

Delete and substitute as follows:

~~**R101.4.3 (N1101.3) Additions, alterations, renovations or repairs.** Additions, alterations, renovations or repairs to an existing building, building system or portion thereof shall conform to the provisions of this code as they relate to new construction without requiring the unaltered portion(s) of the existing building or building system to comply with this code. Additions, alterations, renovations or repairs shall not create an unsafe or hazardous condition or overload existing building systems. An addition shall be deemed to comply with this code if the addition alone complies or if the existing building and addition comply with this code as a single building.~~

~~**Exception:** The following need not comply provided the energy use of the building is not increased:~~

~~1. Storm windows installed over existing fenestration.~~
~~2. Glass only replacements in an existing sash and frame.~~
~~3. Existing ceiling, wall or floor cavities exposed during construction provided that these cavities are filled with insulation.~~
~~4. Construction where the existing roof, wall or floor cavity is not exposed.~~
~~5. Reroofing for roofs where neither the sheathing nor the insulation is exposed. Roofs without insulation in the cavity and where the sheathing or insulation is exposed during reroofing shall be insulated either above or below the sheathing.~~
~~6. Replacement of existing doors that separate *conditioned space* from the exterior shall not require the installation of a vestibule or revolving door, provided, however, that an existing vestibule that separates a *conditioned space* from the exterior shall not be removed,~~
~~7. Alterations that replace less than 50 percent of the luminaires in a space, provided that such alterations do not increase the installed interior lighting power.~~
~~8. Alterations that replace only the bulb and ballast within the existing luminaires in a space provided that the *alteration* does not increase the installed interior lighting power.~~

R101.4.3 (N1101.3) Additions, alterations, or repairs. Additions, alterations, or repairs to an existing building, building system or portion thereof shall comply with Section R406.

Revise definition as follows:

REPAIR. The reconstruction or renewal of any part of an existing building for the purpose of its maintenance.

Add new text as follows:

SECTION R406 (IRC N1106)
ADDITIONS, ALTERATIONS, OR REPAIRS

R406.1 (IRC N1106.1) Scope. The provisions of this section shall control the *alteration*, *repair* and *addition* of existing buildings and structures for compliance with this code.

R406.2 (IRC N1106.2) Existing buildings. Except as specified in this chapter, this code shall not be used to require the removal, *alteration* or abandonment of, nor prevent the continued use and maintenance of, an existing building or building system lawfully in existence at the time of adoption of this code.

R406.4 (IRC N1106.4) Additions, alterations, or repairs. Additions, alterations, or repairs to an existing building, building system or portion thereof shall comply with Sections R406.4.1, R406.4.2 or R406.4.3. Unaltered portions of the existing building or building supply system shall not be required to comply with this code. Additions, alterations, or repairs shall not create an unsafe or hazardous condition or overload existing building systems.

R406.4.1 (IRC N1106.4.1) Additions. An addition shall be deemed to comply with this code if the addition alone complies, if the existing building and addition comply as a single building, or if the building with the addition uses no more energy than the existing building. Additions shall be in accordance with Section 406.4.1.1 or Section 406.4.1.2.

406.4.1.1 (IRC N1106.4.1.1) Prescriptive compliance. Additions shall comply with Sections 406.4.1.1.1 through 406.4.1.1.4.

406.4.1.1.1 (IRC N1106.4.1.1.1) Building envelope. New building envelope assemblies that are part of the addition shall comply with Sections R402.1, R402.2, R402.3.1 through R402.3.5, and R402.4.

> **Exception.** Where nonconditioned space to is changed to conditioned space the building envelope of the addition shall comply where the UA, as determined in Section 402.1.4, of the existing building and the addition, and any alterations that are part of the project, is less than or equal to UA generated for the existing building.

R406.4.1.1.2 (IRC N1106.4.1.1.2) Heating and cooling systems. New heating, cooling and duct systems that are part of the addition shall comply with Sections R403.1, R403.2, R403.3, R403.5 and R403.6.

> **Exception:** Where ducts from an existing heating and cooling system are extended to an addition, duct systems with less than 40 linear feet in unconditioned spaces shall not be required to be tested in accordance with Section R403.2.2.

R406.4.1.1.3 (IRC N1106.4.1.1.3) Service hot water systems. New service hot water systems that are part of the addition shall comply with Section R403.4.

R406.4.1.1.4 (IRC N1106.4.1.1.4) Lighting. New lighting systems that are part of the addition shall comply with Section 404.1.

R406.4.1.2 (IRC N1106.4.1.2) Existing plus addition compliance (Simulated Performance Alternative). Where nonconditioned space is changed to conditioned space the addition shall comply where the annual energy cost or energy use of the addition and the existing building, and any alterations that are part of the project, is less than or equal to the annual energy cost of the existing building when modeled in accordance with Section R405. The addition and any alterations that are part of the project shall comply with Section R405 in its entirety.

406.4.2 (IRC N1106.4.2) Alterations. Alterations to existing buildings shall comply with Section R406.4.2.1 through R406.4.2.4. *Alterations* shall be such that the existing building or structure uses no more energy than the existing building or structure prior to the *alteration*.

406.4.2.1 (IRC N1106.4.2.1) Building envelope. Building envelope assemblies that are part of the alteration shall comply with Sections R402.1.1 or R402.1.3, R402.2.1 through R402.2.11, R402.3.1, R402.3.2, R402.3.6, R402.4.3 and R402.4.4.

Exceptions: The following building envelope alterations are exempt from Section 406.1.2.1.

1. Storm windows installed over existing fenestration.
2. Glass only replacements in an existing sash and frame.

3. Existing ceiling, wall or floor cavities exposed during construction provided that these cavities are filled with insulation.
4. Construction where the existing roof, wall or floor cavity is not exposed.
5. Reroofing for roofs where neither the sheathing nor the insulation is exposed. Roofs without insulation in the cavity and where the sheathing or insulation is exposed during reroofing shall be insulated either above or below the sheathing.

R406.4.2.2 (IRC N1106.4.2.2) Heating and cooling systems. New heating, cooling and duct systems that are part of the alteration shall comply with Sections R403.1, R403.2, R403.3 and R403.6.

Exception: Where ducts from an existing heating and cooling system are extended, duct systems with less than 40 linear feet in unconditioned spaces shall not be required to be tested in accordance with Section R403.2.2.

R406.4.2.3 (IRC N1106.4.2.3) Service hot water systems. New service hot water systems that are part of the alteration shall comply with Section R403.4.

R406.4.2.4 (IRC N1106.4.2.4) Lighting. New lighting systems that are part of the alteration shall comply with Section 404.1.

R406.4.3 Repairs. (IRC N1106.4.3) Work on nondamaged components that is necessary for the required *repair* of damaged components shall be considered part of the *repair* and shall not be subject to the requirements for *alterations* in this section. Routine maintenance, ordinary repairs exempt from *permit*, and abatement of wear due to normal service conditions shall not be subject to the requirements for *alterations.*

Reason: The residential provisions of the 2012 IECC require that additions, alterations renovations or repairs comply with the provisions of the energy code without providing a clear "roadmap" on the specific requirements that apply to these projects. The goal of this code change proposal is to provide clear direction to the code user on what provisions must be complied with based on the type of project. Increasing the clarity of the code will increase the compliance rate and result in increased energy savings for these projects.

This proposal places all of the requirements for additions, alterations, renovations and repairs into a new section in the residential provisions of the IECC and builds off the work conducted by the ICC SEHPCAC in the development of their existing building proposal. The additions portion of the proposal provides an energy neutral method for demonstrating compliance for difficult to comply projects by basically saying that the building with the addition uses no more energy than the existing building. This will allow projects to take advantage of energy efficient alterations on the existing building to offset difficult to comply with features on the addition. For example, garage conversations in Climate Zone 5, where the walls are framed with 2 X 4's, will be forced to increase the insulation levels of the wall system to levels that are difficult to meet without significant cost. Allowing this type of trade-off will increase the overall efficiency of the entire building at a lower potential first cost than insulating the wall system.

An allowance is also included for adding a short duct run in unconditioned space by exempting up to 40 feet of new duct work. Currently the code would require this duct to be tested even though the entire system is very leaky. This allowance is from the Washington State Residential Energy Code.

Exceptions currently included in Section C101.4.3 of the 2012 IECC have been moved into this new section and linked to the applicable references to the building envelope, systems or lighting section. Repairs have been clearly identified and essentially exempted from the requirements of the IECC if they fall within certain defined parameters.

Cost Impact: The code change proposal will not increase the cost of construction.

RE184-13

Public Hearing:	Committee:	AS	AM	D
	Assembly:	ASF	AMF	DF

NNN.NN-NAME

RE185 – 13

R401.2 (IRC N1101.15), R401.3 (IRC N1101.16), R402.1 (IRC N1102.1), R402.2 (IRC N1102.2), R402.3 (IRC N1102.3), R402.4 (IRC N1102.4), R402.5 (IRC N1102.5), R403.1 (IRC N1103.1), R403.1.2 (IRC N1103.1.2), R403.2.1 (IRC N1103.2.1), R403.2.2 (IRC N1103.2.2), R403.2.3 (N1103.2.3), R403.3 (IRC N1103.3), R403.4 (IRC N1103.4), R403.5 (IRC N1103.5), R403.6 (IRC N1103.6), R403.7 (IRC N1103.7), R403.8 (IRC N1103.8), R403.9 (IRC N1103.9), R404 (IRC N1104), R404.1 (IRC N1104.1), R404.1.1 (IRC N1104.1.1), R405 (IRC N1105), R405.2 (IRC N1105.2)

Proponent: Craig Conner, Building Quality, representing self (craig.conner@mac.com)

Revise as follows:

R401.2 (N1101.15) Compliance. ~~Projects shall comply with Sections identified as "mandatory" and with either sections identified as "prescriptive" or the performance approach in Section R405.:~~ Compliance shall be demonstrated by meeting the applicable provisions of this chapter.

R401.3 (N1101.16) Certificate. ~~(Mandatory)~~ (Prescriptive). *(Portions of text not shown remains unchanged)*

R402.1 (N1102.1) General. ~~(Prescriptive).~~ *(Portions of text not shown remains unchanged)*

R402.2 (N1102.2) Specific insulation requirements. ~~(Prescriptive)~~ *(Portions of text not shown remains unchanged)*

R402.3 (N1102.3) Fenestration. ~~(Prescriptive)~~ *(Portions of text not shown remains unchanged)*

R402.4 (N1102.4) Air leakage. ~~(Mandatory)~~ *(Portions of text not shown remains unchanged)*

R402.5 (N1102.5) Maximum fenestration *U*-factor and SHGC. ~~(Mandatory).~~ *(Portions of text not shown remains unchanged)*

R403.1 (N1103.1) Controls. ~~(Mandatory)~~ *(Portions of text not shown remains unchanged)*

R403.1.2 (N1103.1.2) Heat pump supplementary heat. ~~(Mandatory)~~ *(Portions of text not shown remains unchanged)*

R403.2.1 (N1103.2.1) Insulation. ~~(Prescriptive)~~ *(Portions of text not shown remains unchanged)*

R403.2.2 (N1103.2.2) Sealing. ~~(Mandatory)~~ *(Portions of text not shown remains unchanged)*

R403.2.3 (N1103.2.3) Building cavities. ~~(Mandatory)~~ *(Portions of text not shown remains unchanged)*

R403.3 (N1103.3) Mechanical system piping insulation. ~~(Mandatory)~~ *(Portions of text not shown remains unchanged)*

R403.5 (N1103.5) Mechanical ventilation. ~~(Mandatory)~~ *(Portions of text not shown remains unchanged)*

R403.6 (N1103.6) Equipment sizing. ~~(Mandatory)~~ *(Portions of text not shown remains unchanged)*

R403.7 (N1103.7) Systems serving multiple dwelling units. **~~(Mandatory)~~** *(Portions of text not shown remains unchanged)*

R403.8 (N1103.8) Snow melt system controls. ~~(Mandatory)~~ *(Portions of text not shown remains unchanged)*

R403.9 (N1103.9) Pools and inground permanently installed spas. ~~**(Mandatory)**~~ *(no change to code text)*

SECTION R404 (N1104)
ELECTRICAL POWER AND LIGHTING SYSTEMS
~~**(MANDATORY)**~~

R404.1 (N1104.1) Lighting equipment ~~**(Mandatory).**~~ *(Portions of text not shown remains unchanged)*

R404.1.1 (N1104.1.1) Lighting equipment ~~**(Mandatory).**~~ *(Portions of text not shown remains unchanged)*

SECTION R405 (N1105)
SIMULATED PERFORMANCE ALTERNATIVE
~~**(Performance)**~~

R405.2 (N1105.2) Mandatory requirements. Compliance with this Section requires that ~~the mandatory provisions identified in Section R401.2 be met~~ projects comply with Sections R401.3, R402.4, R402.5, R403.1, R403.2.2, R403.2.3, R403.4 through R403.9, and R404. ~~All~~ Supply and return ducts not completely inside the building thermal envelope shall be insulated to a minimum of R-6.

Reason: This change corrects the erroneous use of the term "*mandatory*". This moves the specification of what can be traded off with the performance approach into the code text about the performance approach, rather than spreading that information throughout the code, as was in energy codes prior to 2006.

The word "*shall*" and the concept of "*mandatory*" is woven throughout the I-codes. It is important that the energy code use "shall" correctly. The IRC definition is

***SHALL**. The term, when used in this code, is construed to mean "mandatory".*

Since the IECC inherits the IRC definitions, IECC use of "*shall*" implies "*mandatory*". Implying sections with the word "*prescriptive*" is not "*mandatory*" is at the very least confusing, if not wrong.

Why are these labels even in the IECC? The "*prescriptive*" and "*mandatory* labels are intended separate what could from what could not be traded off in the performance path. A simpler and clearer way approach is to list what the performance section is applicable to in the performance section itself. Section R405 (Performance) already has a subsection defining what the performance approach applies to (currently titled "Mandatory Requirements").

The existing code incorrectly lists some requirements as "prescriptive", meaning they can be traded off under the performance approach. Requirements incorrectly listed as "tradable" include eve baffle R402.2.3, the definition of "mass walls" R402.2.5, installing insulation to be permanently attached in the floor and crawlspace (Sections 402.2.7 and 402.2.10), and the crawl space vapor retarder (Section 402.2.9). Permanent attachment of the insulation and important vapor retarders should not be traded away in a performance calculation. This change corrects the items incorrectly labeled as tradable.

This change moves the list of requirements that cannot be traded into a single location in the performance section. It removes over 20 instances unnecessary and confusing uses of "*mandatory*", "*prescriptive*" and "*performance*" from section and subsection heading, and corrects errors in labeling requirements that can be traded; all without any change to section or subsection content.

Cost Impact: The code change proposal will not increase the cost of construction.

RE185-13

Public Hearing:	Committee:	AS	AM	D
	Assembly:	ASF	AMF	DF

R401.2-#1 EC-CONNER.doc

RE186 – 13

R202 (IRC N1101.9), R401.2 (IRC N1101.15), R406 (NEW) (IRC N1106 (NEW))

Proponent: William Fay, Energy Efficient Codes Coalition; Brian Dean, Energy Efficient Codes Coalition; Garrett Stone, Brickfield Burchette Ritts & Stone, PC; Jeff Harris, Alliance to Save Energy; Harry Misuriello, American Council for an Energy-Efficient Economy; and Bill Prindle, Energy Efficient Codes Coalition

Revise follows:

SECTION R401 (N1101)
GENERAL

R401.2 (IRC N1101.15)Compliance. Projects shall comply with Sections identified as "mandatory" and with either sections identified as "prescriptive" or the simulated performance alternative ~~approach~~ in Section R405. In addition, all projects shall comply with Section R406.

SECTION R406 (N1106)
ADDITIONAL ENERGY EFFICIENCY (MANDATORY)

R406.1 (N1106.1)Scope. This section establishes additional mandatory requirements applicable to all compliance approaches to achieve additional energy efficiency.

R406.2 (N1106.2)Points-based compliance. One or more energy efficiency measure(s) shall be installed in accordance with Section R406.3 that cumulatively equal or exceed 5 (five) Flex Points for the appropriate Climate Zone. Projects complying under the simulated performance alternative outlined in Section R405 shall demonstrate compliance with Section R405 without including in the proposed design any features that will be utilized to comply with Section R406.

Exceptions: The requirements of this section shall not apply to:

1. Projects complying under the performance approach outlined in Section R405, where the *proposed design* under section R405.3 is shown to have an annual energy cost that is less than or equal to 95% of the annual energy cost of the *standard reference design.*
2. Projects with an on-site or building integrated renewable energy system installed that provides not less than 0.50 watts per square foot (5.4 W/m2) of *conditioned floor area*.
3. Additions with a *conditioned floor area* equal to or less than 1,000 square feet.
4. *Alterations*, renovations and *repairs* to an existing building.

R406.3 (N1106.3) Flex Points for additional energy efficiency. Measures shall be selected from the applicable Flex Points Table based on the applicable federal minimum equipment efficiency established by federal rule for that state that applies to the specified heating and cooling equipment on the date that a permit is issued. Each measure chosen shall receive credit for the Flex Points as indicated in the applicable Table for the specific Climate Zone. Interpolation of points between measures shall not be permitted.

R406.3.1 (N1106.3.1) Use of Flex Points Table R406.3.1. In states where the applicable federal minimum efficiencies are less than or equal to 80 AFUE for non-weatherized gas residential furnaces, equal to 7.7 HSPF for split system heat pumps, and equal to 13 SEER for split system air conditioners, Table R406.3.1 shall be used.

TABLE R406.3.1 (N1106.3.1)
FLEX POINTS FOR ADDITIONAL ENERGY EFFICIENCY

Measure Number	Measure Description	Flex Point Value								
		CZ 1	CZ 2	CZ 3	CZ 4	CZ 4C[a]	CZ 5	CZ 6	CZ 7	CZ 8

1a	≥ 2.5% reduction in total UA [b]	2	2	2	2	2	2	3	4	4
1b	≥ 5% reduction in total UA [b]	3	3	3	3	3	4	5	5	5
1c	≥ 7.5% reduction in total UA [b]	5	5	5	5	5	6	7	8	8
1d	≥ 10% reduction in total UA [b]	6	7	7	7	8	8	9	10	10
2a	≥ 10% reduction in glazed fenestration area-weighted average SHGC	2	1	-	-	-	-	-	-	-
2b	≥ 20% reduction in glazed fenestration area-weighted average SHGC	4	1	-	-	-	-	-	-	-
3a	≤ 4 ACH50 air leakage rate with ERV or HRV installed [c]	1	2	-	-	-	-	-	-	-
3b	≤ 3 ACH50 air leakage rate with ERV or HRV installed [c]	2	4	5	6	7	7	7	8	8
3c	≤ 2 ACH50 air leakage rate with ERV or HRV installed [c]	2	5	7	9	9	9	10	11	11
4a	≤ 2 CFM of total duct leakage per 100 square feet of conditioned floor area when tested in accordance with Section R403.2.2	1	1	1	1	-	1	1	1	1
4b	100% of duct thermal distribution system located in *passively conditioned space* and/or *actively conditioned space*	1	1	1	1	1	1	2	2	2
4c	100% of duct thermal distribution system located in *actively conditioned space* [d]	8	8	9	11	8	12	15	17	17
4d	100% of ductless thermal distribution system located in *passively conditioned space* and/or *actively conditioned space* [d]	8	8	9	11	8	12	15	17	17
4e	100% of hydronic thermal distribution system located in *actively conditioned space* [d]	8	8	9	11	8	12	15	17	17
5a	≥ 15 SEER and ≥ 12.5 EER cooling system efficiency [e]	4	3	1	1	-	-	-	-	-
5b	≥ 16 SEER and ≥ 13 EER cooling system efficiency [e]	7	5	2	1	-	-	-	-	-
5c	≥ 18 SEER and ≥ 14 EER cooling system efficiency [e]	11	8	3	2	-	1	-	-	-
5d	≥ 16 EER cooling system efficiency [e]	11	8	3	2	-	1	-	-	-
5e	≥ 18 EER cooling system efficiency [e]	15	11	4	3	-	1	-	-	-
5f	≥ 20 EER cooling system efficiency [e]	17	13	5	3	-	1	1	-	-
6a	≥ 90 AFUE heating system efficiency [f]	-	1	4	6	6	7	7	8	9
6b	≥ 92 AFUE heating system efficiency [f]	-	2	5	7	7	8	9	10	11
6c	≥ 95 AFUE heating system efficiency [f]	-	2	6	8	9	10	11	12	13
6d	≥ 96 AFUE heating system efficiency [f]	-	2	6	9	10	10	11	12	14
6e	≥ 98 AFUE heating system efficiency [f]	-	3	7	10	11	12	13	14	15
7a	≥ 8.8 HSPF heating system efficiency [f]	-	-	1	1	2	2	2	2	1
7b	≥ 9.5 HSPF heating system efficiency [f]	-	1	2	3	3	4	4	4	3
7c	≥ 10.5 HSPF heating system efficiency [f]	-	1	3	6	6	7	6	5	5
7d	≥ 3 COP heating system efficiency [f]	-	1	3	5	5	6	5	5	4
7e	≥ 3.5 COP heating system efficiency [f]	-	2	5	8	8	9	9	9	7

7f	≥ 4 COP heating system efficiency [f]	-	3	6	10	10	12	11	10	8
8a	≥ 0.7 EF for fossil fuel service water heating system	-	-	-	-	-	-	-	-	-
8b	≥ 0.8 EF for fossil fuel service water heating system	4	3	3	2	2	2	1	1	1
8c	≥ 0.95 EF for electric service water heating system	-	-	-	-	-	-	-	-	-
8d	≥ 1.15 EF for electric service water heating system	7	7	7	4	5	3	3	2	1
8e	≥ 0.4 Solar Fraction for service water heating system	6	7	9	7	9	6	5	4	3

a. Climate Zone 4C is Climate Zone Marine 4.
b. The Total UA shall be calculated in accordance with Section R402.1.4 Total UA alternative.
c. Minimum Heat Recovery Ventilator (HRV) and Energy Recovery Ventilator (ERV) requirements, measured at the lowest tested net supply airflow, shall be ≥ 75% Sensible Recovery Efficiency (SRE), ≤ 1.1 W/CFM Fan Energy and shall not use recirculation as a defrost strategy. In addition, the Energy Recovery Ventilator (ERV) shall be ≥ 50% Latent Recovery/Moisture Transfer (LRMT).
d. To achieve 100% of the thermal distribution located in the actively conditioned space, no ducts or pipes used for the heating and cooling systems shall be located within walls or ceilings where losses are not directly regained into the conditioned space.
e. For multiple cooling systems, all systems shall meet or exceed the minimum efficiency requirements in Table R406.3.1 and shall be sized to serve 100% of the cooling design load. As an alternative, each system installed shall receive credit for the percentage of the Flex Points for the measure equal to the percentage of the cooling design load served by the system.
f. For multiple heating systems, all systems shall meet or exceed the minimum efficiency requirements in Table R406.3.1 and shall be sized to serve 100% of the heating design load. As an alternative, each system installed shall receive credit for the percentage of the Flex Points for the measure equal to the percentage of the heating design load served by the system.

R406.3.2 (N1106.3.2) Use of Flex Points Table R406.3.2.. In states where the applicable federal minimum efficiencies are less than or equal to 80 AFUE for non-weatherized gas residential furnaces, equal to 8.2 HSPF for split system heat pumps, and less than or equal to 14 SEER for split system air conditioners, Table R406.3.2 shall be used.

TABLE R406.3.2 (N1106.3.2)
FLEX POINTS FOR ADDITIONAL ENERGY EFFICIENCY

Measure Number	Measure Description	Flex Point Value								
		CZ 1	CZ 2	CZ 3	CZ 4	CZ 4C [a]	CZ 5	CZ 6	CZ 7	CZ 8
1a	≥ 2.5% reduction in total UA [b]	1	1	2	2	2	2	3	4	4
1b	≥ 5% reduction in total UA [b]	3	3	3	3	3	4	5	5	5
1c	≥ 7.5% reduction in total UA [b]	5	5	5	5	5	6	7	8	8
1d	≥ 10% reduction in total UA [b]	6	7	7	7	8	8	9	10	10
2a	≥ 10% reduction in glazed fenestration area-weighted average SHGC	2	1	-	-	-	-	-	-	-
2b	≥ 20% reduction in glazed fenestration area-weighted average SHGC	4	1	-	-	-	-	-	-	-
3a	≤ 4 ACH50 air leakage rate with ERV or HRV installed [c]	1	2	-	-	-	-	-	-	-
3b	≤ 3 ACH50 air leakage rate with ERV or HRV installed [c]	2	4	5	7	7	7	7	8	8
3c	≤ 2 ACH50 air leakage rate with ERV or HRV installed [c]	2	5	7	9	9	9	10	11	11

4a	≤ 2 CFM of total duct leakage per 100 square feet of conditioned floor area when tested in accordance with Section R403.2.2	1	1	1	1	-	1	1	1	1
4b	100% of duct thermal distribution system located in *passively conditioned space* and/or *actively conditioned space*	1	1	1	1	1	1	2	2	2
4c	100% of duct thermal distribution system located in *actively conditioned space* [d]	8	8	9	11	8	12	15	17	17
4d	100% of ductless thermal distribution system located in *passively conditioned space* and/or *actively conditioned space* [d]	8	8	9	11	8	12	15	17	17
4e	100% of hydronic thermal distribution system located in *actively conditioned space* [d]	8	8	9	11	8	12	15	17	17
5a	≥ 15 SEER and ≥ 12.5 EER cooling system efficiency [e]	2	2	1	-	-	-	-	-	-
5b	≥ 16 SEER and ≥ 13 EER cooling system efficiency [e]	5	4	1	1	-	-	-	-	-
5c	≥ 18 SEER and ≥ 14 EER cooling system efficiency [e]	9	7	3	2	-	-	-	-	-
5d	≥ 16 EER cooling system efficiency [e]	10	7	3	2	-	-	-	-	-
5e	≥ 18 EER cooling system efficiency [e]	13	10	4	2	-	1	-	-	-
5f	≥ 20 EER cooling system efficiency [e]	16	12	5	3	-	1	-	-	-
6a	≥ 90 AFUE heating system efficiency [f]	-	2	4	6	6	7	8	8	9
6b	≥ 92 AFUE heating system efficiency [f]	-	2	5	7	7	8	9	10	11
6c	≥ 95 AFUE heating system efficiency [f]	-	2	6	8	9	10	11	12	13
6d	≥ 96 AFUE heating system efficiency [f]	-	2	6	9	10	10	11	12	14
6e	≥ 98 AFUE heating system efficiency [f]	-	3	7	10	11	12	13	14	15
7a	≥ 8.8 HSPF heating system efficiency [f]	-	-	-	-	-	-	-	-	-
7b	≥ 9.5 HSPF heating system efficiency [f]	-	-	1	2	2	2	2	2	1
7c	≥ 10.5 HSPF heating system efficiency [f]	-	1	2	4	4	5	4	3	3
7d	≥ 3 COP heating system efficiency [f]	-	1	2	3	3	4	3	3	2
7e	≥ 3.5 COP heating system efficiency [f]	-	2	4	6	6	8	7	6	5
7f	≥ 4 COP heating system efficiency [f]	-	2	5	8	9	10	10	9	7
8a	≥ 0.7 EF for fossil fuel service water heating system	2	2	-	-	-	-	-	-	-
8b	≥ 0.8 EF for fossil fuel service water heating system	7	5	4	3	2	2	2	1	1
8c	≥ 0.95 EF for electric service water heating system	-	-	-	-	-	-	-	-	-
8d	≥ 1.15 EF for electric service water heating system	7	7	7	4	5	3	3	2	2
8e	≥ 0.4 Solar Fraction for service water heating system	8	9	9	7	9	6	5	4	3

a. Climate Zone 4C is Climate Zone Marine 4.
b. The Total UA shall be calculated in accordance with Section R402.1.4 Total UA alternative.
c. Minimum Heat Recovery Ventilator (HRV) and Energy Recovery Ventilator (ERV) requirements, measured at the lowest tested net supply airflow, shall be ≥ 75% Sensible Recovery Efficiency (SRE), ≤ 1.1 W/CFM Fan Energy and shall not use recirculation as a defrost strategy. In addition, the Energy Recovery Ventilator (ERV) shall be ≥ 50% Latent Recovery/Moisture Transfer (LRMT).

d. To achieve 100% of the thermal distribution located in the actively conditioned space, no ducts or pipes used for the heating and cooling systems shall be located within walls or ceilings where losses are not directly regained into the conditioned space.
e. For multiple cooling systems, all systems shall meet or exceed the minimum efficiency requirements in Table R406.3.2 and shall be sized to serve 100% of the cooling design load. As an alternative, each system installed shall receive credit for the percentage of the Flex Points for the measure equal to the percentage of the cooling design load served by the system.
f. For multiple heating systems, all systems shall meet or exceed the minimum efficiency requirements in Table R406.3.2 and shall be sized to serve 100% of the heating design load. As an alternative, each system installed shall receive credit for the percentage of the Flex Points for the measure equal to the percentage of the heating design load served by the system.

R406.3.3 (N1106.3.3) Use of Flex Points Table R406.3.3. In states where the applicable federal minimum efficiencies are equal to 90 AFUE for non-weatherized gas residential furnaces, equal to 8.2 HSPF for split system heat pumps, and less than or equal to 14 SEER for split system air conditioners, Table R406.3.3 shall be used.

TABLE R406.3.3 (N1106.3.3)
FLEX POINTS FOR ADDITIONAL ENERGY EFFICIENCY

Measure Number	Measure Description	Flex Point Value								
		CZ 1	CZ 2	CZ 3	CZ 4	CZ 4C [a]	CZ 5	CZ 6	CZ 7	CZ 8
1a	≥ 2.5% reduction in total UA [b]	1	1	2	2	2	2	3	4	4
1b	≥ 5% reduction in total UA [b]	3	3	3	3	3	4	4	5	5
1c	≥ 7.5% reduction in total UA [b]	4	5	5	5	5	6	7	8	8
1d	≥ 10% reduction in total UA [b]	6	7	7	7	7	8	9	10	10
2a	≥ 10% reduction in glazed fenestration area-weighted average SHGC	2	1	-	-	-	-	-	-	-
2b	≥ 20% reduction in glazed fenestration area-weighted average SHGC	4	2	-	-	-	-	-	-	-
3a	≤ 4 ACH50 air leakage rate with ERV or HRV installed [c]	1	2	-	-	-	-	-	-	-
3b	≤ 3 ACH50 air leakage rate with ERV or HRV installed [c]	2	4	5	6	7	7	7	8	8
3c	≤ 2 ACH50 air leakage rate with ERV or HRV installed [c]	2	5	7	9	9	9	10	11	11
4a	≤ 2 CFM of total duct leakage per 100 square feet of conditioned floor area when tested in accordance with Section R403.2.2	1	1	1	1	-	1	1	1	1
4b	100% of duct thermal distribution system located in *passively conditioned space* and/or *actively conditioned space*	1	1	1	1	1	1	2	2	2
4c	100% of duct thermal distribution system located in *actively conditioned space* [d]	8	8	9	10	8	12	15	17	17
4d	100% of ductless thermal distribution system located in *passively conditioned space* and/or *actively conditioned space* [d]	8	8	9	10	8	12	15	17	17
4e	100% of hydronic thermal distribution system located in *actively conditioned space* [d]	8	8	9	10	8	12	15	17	17
5a	≥ 15 SEER and ≥ 12.5 EER cooling system efficiency [e]	2	2	1	-	-	-	-	-	-
5b	≥ 16 SEER and ≥ 13 EER cooling system efficiency [e]	5	4	1	1	-	-	-	-	-
5c	≥ 18 SEER and ≥ 14 EER cooling system	9	7	3	2	-	-	-	-	-

	efficiency [e]									
5d	≥ 16 EER cooling system efficiency [e]	10	7	3	2	-	-	-	-	-
5e	≥ 18 EER cooling system efficiency [e]	13	10	4	2	-	1	-	-	-
5f	≥ 20 EER cooling system efficiency [e]	16	12	5	3	-	1	-	-	-
6a	≥ 90 AFUE heating system efficiency [f]	-	-	-	-	-	-	-	-	-
6b	≥ 92 AFUE heating system efficiency [f]	-	-	-	1	1	1	1	1	1
6c	≥ 95 AFUE heating system efficiency [f]	-	-	2	2	3	3	3	4	4
6d	≥ 96 AFUE heating system efficiency [f]	-	1	2	3	3	4	4	4	5
6e	≥ 98 AFUE heating system efficiency [f]	-	1	3	4	4	5	5	6	6
7a	≥ 8.8 HSPF heating system efficiency [f]	-	-	-	-	-	-	-	-	-
7b	≥ 9.5 HSPF heating system efficiency [f]	-	-	1	2	2	2	2	2	1
7c	≥ 10.5 HSPF heating system efficiency [f]	-	1	2	4	4	5	4	3	3
7d	≥ 3 COP heating system efficiency [f]	-	1	2	3	3	4	3	3	2
7e	≥ 3.5 COP heating system efficiency [f]	-	2	4	6	6	8	7	6	5
7f	≥ 4 COP heating system efficiency [f]	-	2	5	8	9	10	10	9	7
8a	≥ 0.7 EF for fossil fuel service water heating system	2	2	1	-	-	-	-	-	-
8b	≥ 0.8 EF for fossil fuel service water heating system	7	5	4	3	2	2	2	1	1
8c	≥ 0.95 EF for electric service water heating system	-	-	-	-	-	-	-	-	-
8d	≥ 1.15 EF for electric service water heating system	7	7	7	4	5	3	3	2	1
8e	≥ 0.4 Solar Fraction for service water heating system	8	9	9	7	9	6	5	4	3

a. Climate Zone 4C is Climate Zone Marine 4.
b. The Total UA shall be calculated in accordance with Section R402.1.4 Total UA alternative.
c. Minimum Heat Recovery Ventilator (HRV) and Energy Recovery Ventilator (ERV) requirements, measured at the lowest tested net supply airflow, shall be ≥ 75% Sensible Recovery Efficiency (SRE), ≤ 1.1 W/CFM Fan Energy and shall not use recirculation as a defrost strategy. In addition, the Energy Recovery Ventilator (ERV) shall be ≥ 50% Latent Recovery/Moisture Transfer (LRMT).
d. To achieve 100% of the thermal distribution located in the actively conditioned space, no ducts or pipes used for the heating and cooling systems shall be located within walls or ceilings where losses are not directly regained into the conditioned space.
e. For multiple cooling systems, all systems shall meet or exceed the minimum efficiency requirements in Table R406.3.3 and shall be sized to serve 100% of the cooling design load. As an alternative, each system installed shall receive credit for the percentage of the Flex Points for the measure equal to the percentage of the cooling design load served by the system.
f. For multiple heating systems, all systems shall meet or exceed the minimum efficiency requirements in Table R406.3.3 and shall be sized to serve 100% of the heating design load. As an alternative, each system installed shall receive credit for the percentage of the Flex Points for the measure equal to the percentage of the heating design load served by the system.

Revise as follows:

SECTION R202 (IRC N1101.9)
GENERAL DEFINITIONS

CONDITIONED SPACE. An area ~~or room~~ within a building that is either *actively conditioned space* or *passively conditioned space* ~~being heated or cooled, containing uninsulated ducts, or with a fixed opening directly into an adjacent *conditioned space*~~.

ACTIVELY CONDITIONED SPACE. An area within a *building thermal envelope* that is directly heated or cooled, including any habitable room.

PASSIVELY CONDITIONED SPACE. An area within a *building thermal envelope* that is not directly heated or cooled, including wall cavities, floor cavities, ceiling cavities, storage rooms, closets, non-habitable attic, non-habitable basement, crawlspace, spaces or cavities that contain uninsulated ducts or thermal distribution systems or have an opening directly into an adjacent conditioned space.

Reason: The purpose of this code change is to establish a new mandatory section to achieve additional energy efficiency. This proposal will allow builders the flexibility to choose from a menu of options to achieve 5% or more in energy savings beyond compliance with the current prescriptive or performance paths in the 2012 *IECC*. The new mandatory set of points-based options are predicated on the notion that because the current residential I-Codes require a solid foundation of "whole house" efficiency features, builders should have flexibility to determine the improvements that add onto that foundation. In addition to bringing about a reasonable, but modest, improvement in energy efficiency in the 2015 *IECC*, the proposal will also lay the groundwork for emerging technologies and future improvements to the code. Similar options-based approaches are currently found in both the commercial provisions of the 2012 *IECC* (section C406) and in residential codes adopted in a number of states. As discussed below, this proposal improves the *IECC* in at least five important ways:

The proposal improves the overall energy efficiency of the *IECC* and *IRC* by about five percent, reducing the home's energy consumption and homeowner operating costs.

From a national energy policy standpoint, the need to improve the efficiency of America's buildings has not changed. Because buildings continue to consume over 50% of the natural gas and over 70% of the electricity consumed in America, the nation's building codes should incorporate reasonable measures to reduce energy use and peak demand wherever feasible. The residential requirements of the 2012 *IECC* represent significant improvements over previous editions of the code, and we believe that an additional 5% improvement in efficiency in the 2015 *IECC* is not only feasible, but is crucial to sound national energy policy and our nation's energy future. Each new building and substantial addition should bring the country one step closer to our national goal of energy independence.

In addition, energy efficient construction generates significant operating savings that quickly recoup the incremental cost of these improvements to new homebuyers. For example, when the US Department of Energy compared homes built to the 2012 *IECC* with homes built to the 2006 *IECC*, average homeowner life-cycle (30-year) cost savings ranged from $4,763 in Climate Zone 2 (the lowest savings in all climate zones) to $33,105 in Climate Zone 8 (the highest savings). And, even after accounting for the incremental up-front costs of mortgage fees and down payment, a homeowner's cumulative cash flow became positive within a year or two in all eight climate zones.

The proposal creates a highly flexible method to achieve additional energy savings that would be difficult to require in the current *IECC* and *IRC* structure.

Although there are many possible improvements beyond the 2012 *IECC*, some of these improvements would be impractical or difficult to include as prescriptive requirements at this time. For example, some emerging technologies may save energy, but because of limited availability, high cost, or federal laws, it may not be reasonable – or even legal – to require these technologies in every building. The *IECC* does not currently have an organized method for recognizing specific prescriptive options beyond the baseline requirements.

This proposal creates an approach and format that recognizes the energy savings potential of a range of systems and building features that otherwise would not be feasible to include in the baseline requirements at this time. For example, the proposal includes high-efficiency heating, cooling, and water heating options that could not be required outright because of federal preemption issues. The proposal also includes envelope-only measures that reward builders for going well beyond the current code requirements. The result is a reasonably flexible system of options that builders can choose from that goes beyond the 2012 *IECC* and *IRC*, provides incentives for good building practice and technologies, and gives jurisdictions an easily-adaptable, and easy to administer method to set ever-improving efficiency requirements.

The proposal lays the groundwork for future improvement in the code by establishing a structure for both prescriptive- and performance-based compliance options.

In order to maximize flexibility and prepare for future improvements to the code, this proposal establishes multiple methods of compliance for new buildings and additions of more than 1,000 square feet (smaller additions, alterations, renovations and repairs are currently proposed to be exempt to keep the proposal simpler).

- For code users who prefer a straightforward points-based approach to code compliance, Section R406 outlines a number of options for each climate zone that can be combined for a total of at least 5 points. Each point represents roughly a one percent decrease in the present value of energy costs over the life of the building (so 5 points equal roughly a 5% improvement in efficiency over the 2012 *IECC*).
- For code users who wish to use the simulated performance alternative in Section R405, the proposal also allows compliance where the proposed design demonstrates an energy cost less than or equal to 95% of the standard reference design. The proposal also allows compliance with the points system so long as the user does not "double count" in its performance analysis any improvements used in points compliance.
- Section R406 also creates a new option to demonstrate compliance through installation of renewable energy systems.

These compliance options can be easily updated in the future. For example, as additional technologies and building practices are improved in the future, these technologies can be added to the table, along with a corresponding point value, without a total rewrite of the code.
Points have been calculated based on the present value of energy cost savings over the current code (with recognition of relevant federal equipment standards), after reflecting the estimated useful life of each measure and an assumed 30-year life of the building for purposes of the analysis (consistent with a 30-year mortgage). This approach factors in the durability and useful life of each additional option chosen, recognizing that it is not the energy cost savings in the first year that is critical, but the cost savings over the life of the home that is most important. Although no building energy simulation on this scale will be perfect, the analysis behind the Flex Points tables is among the most sophisticated and detailed of its type. The analysis used the Department of Energy building analysis and present value calculation methodology, which will allow for easy updates to the table in the future. The analysis includes 105 TMY3 weather locations and 12 building types to account for varying stories, foundations and fuel types for each of the baseline and upgrade measures.

The proposal creates incentives for code users to consider installing high-efficiency heating, cooling, and water heating systems, as well as other alternatives, without degrading the thermal building envelope or violating federal law.

Code-writing organizations have long wrestled with the dilemma of how to incorporate high-efficiency heating, cooling, and water heating requirements into the code without violating federal law and without sacrificing improvements to the thermal envelope in return. In past code cycles, EECC was instrumental in removing the equipment trade-offs from the code to resolve the issues these trade-offs and the federal laws created. We remain strongly committed to that approach today. However, this proposal takes the next step by leaving the 2012 *IECC* baseline requirements intact, while offering code users the choice of equipment upgrades among several other potential improvements beyond the baseline requirements.
The proposal includes three Flex Points tables that correspond with current requirements and expected changes to HVAC equipment efficiency in the coming years. Although we hope to see improvements in federal efficiency standards for heating and cooling equipment take effect in the near future, it is not yet clear when (or in some cases if) new requirements that have been developed by U.S. DOE will actually become effective. It would not be appropriate to award “credit” for a measure already required by federal law. And U.S. DOE is working to replace national standards with regional-based standards that will vary from one region to the next.
The proposal addresses these complications in a relatively simple way. The point values in each table under Section R406 have been set according to the energy savings that would result based on a specific equipment efficiency baseline in all climate zones. The first table, Table R406(a), establishes a baseline set of the heating and cooling equipment efficiencies reflective of current efficiencies. When federal minimum efficiencies are increased for specific heating and/or cooling equipment, as is reflected under the latest federal rule, states will apply the appropriate table. The choice of tables will allow states to apply the appropriate Flex Points without recalculating the savings for each individual measure.

The proposal allows jurisdictions to “try out” a wide variety of efficiency measures that would be difficult to require as prescriptive requirements.

Innovative building practices or emerging technologies can benefit from being listed in state and local building codes. However, states may have difficulty prescriptively requiring new technologies or building practices for all homes that are not yet widely available. For example, ground-source heat pumps can offer significant energy savings, but because of geological features or regulatory issues, they may not be appropriate in all circumstances. The proposal above provides an incentive to consider installing a ground source heat pump as one of several compliance options under Section R406, but also offers many other comparable options or combinations of such options to achieve the same level of savings.
By incorporating several of these practices and technologies among the multiple options of Section R406, the proposal above essentially gives these emerging technologies and practices a foothold, and allows consumers and the market to determine the most feasible options for any given project. As emerging technologies become more mainstream, Section R406 may also be a good source for additional improvements to the prescriptive baseline in future code editions.

Cost Impact: The code change proposal will increase the cost of construction.

RE186-13

Public Hearing:	Committee:	AS	AM	D
	Assembly:	ASF	AMF	DF

R401.2-EC-DEAN-HARRIS-MISURELLO-PRINDLE-STONEFNF-bd2(2).DOC

RE187 – 13

R401.2 (IRC N1101.15), R406 (NEW) (IRC N1106 NEW), R406.1 (NEW) (IRC N1106.1 NEW), Table R406.1 (NEW) (IRC N1106.1 NEW)

Proponent: Eric Makela, Britt/Makela Group, Inc., representing Northwest Energy Codes Group (Eric@BrittMakela.com)

Revise as follows:

R401.2 (N1101.15) Compliance. ~~Projects shall comply with Sections identified as "mandatory" and with either sections identified as "prescriptive" or performance approach in Section R405.~~ Residential buildings shall comply with one of the following:

1. The requirements of Section R402.1, Section 406, and all sections identified as "mandatory".
2. The requirements of Section R405 and all sections identified as "mandatory". The proposed design shall be equal to or less than 95 percent of the standard reference design building.

SECTION R406
ADDITIONAL PRESCRIPTIVE EFFICIENCY MEASURES

R406.1 (N1106.1) Additional efficiency measures. Each dwelling unit shall include one of the measures described in Table R406.1.

Exceptions:

1. Residential buildings which include a ground or water source heat pump with minimum COP meeting the requirements of Table C403.2.3(2).

TABLE R406.1 (N1106.1)
ADDITIONAL EFFICIENCY MEASURES

CLIMATE ZONES 1, 2 and 3	
	MEASURE
1	HIGH EFFICIENCY HVAC SYSTEM: SEER 16 Air Conditioner and 95 percent AFUE or SEER 18 and 10.5 HSPF
2	HIGH EFFICIENCY WATER HEATING: Gas water heater for all water heater end uses, EF – 0.80, or Electric water heater for all water heater end uses, EF – 1.15
3	SOLAR HOT WATER Solar Domestic Hot Water with a minimum 0.4 Solar Fraction
4	ENVELOPE AND LIGHTING OPTION:: Total UA 10% above the minimum code UA
5	ENVELOPE OPTION: Ceiling with cool roof with the following characteristics: • Three-year aged solar reflectance[b] of 0.55 and three-year aged thermal emittance[b] of 0.75, or • Initial solar reflectance[b] of 0.70 and initial thermal emittance[b] of 0.75, or • Three-year-aged solar reflectance index[c] of 64, or • Initial solar reflectance index[c] of 82
6	HIGH EFFICIENCY HVAC DISTRIBUTION SYSTEM: All heating and cooling system components installed inside the conditioned space. All combustion equipment shall be direct vent or sealed combustion. Not qualifying: Systems utilizing electric resistant heat, including baseboard and furnace, as the primary heat source.

CLIMATE ZONES 4, MARINE 4, and 5	
MEASURE	
1	HIGH EFFICIENCY HVAC SYSTEM: Air-source heat pump with minimum HSPF of 10.5
2	ENVELOPE UA: The proposed building envelope shall have a total UA at least 10 percent less than the code target UA as calculated using Table 402.1.4 and Section 402.1.4 Total UA alternative**.**
3	REDUCED AIR LEAKAGE ENVELOPE: AIR LEAKAGE CONTROL AND EFFICIENT VENTILATION: Reduce the tested air leakage to 2.0 air changes per hour maximum. and All whole house ventilation requirements as determined by Section M1507.3 of the International Residential Code shall be met with a heat recovery ventilation system with minimum sensible heat recovery efficiency of 0.75.
4	HIGH EFFICIENCY HVAC DISTRIBUTION SYSTEM: All heating and cooling system components installed inside the conditioned space. All combustion equipment shall be direct vent or sealed combustion. Not qualifying: Systems utilizing electric resistant heat, including baseboard and furnace, as the primary heat source.
5	HIGH EFFICIENCY WATER HEATING. Water heating system includes one of the following: Gas, propane, or oil water heater with a minimum EF of 0.80 or Electric water heater with a minimum EF of 1.15
6	SOLAR HOT WATER Solar Domestic Hot Water with a minimum 0.4 Solar Fraction

CLIMATE ZONES 6, 7 & 8	
MEASURE	
1	HIGH EFFICIENCY HVAC SYSTEM: Gas propane or oil-fired furnace or boiler with minimum AFUE of 98 percent, or Air-source heat pump with minimum HSPF of 10.5
2	ENVELOPE UA: The proposed building envelope shall have a total UA at least 10 percent less than the code target UA as calculated using Table 402.1.4 and Section 402.1.4 Total UA alternative
3	REDUCED AIR LEAKAGE ENVELOPE: Reduce the tested air leakage to 2.0 air changes per hour maximum. and All whole house ventilation requirements as determined by Section M1507.3 of the International Residential Code shall be met with a heat recovery ventilation system with minimum sensible heat recovery efficiency of 0.75.
4	HIGH EFFICIENCY HVAC DISTRIBUTION SYSTEM: All heating and cooling system components installed inside the conditioned space. All combustion equipment shall be direct vent or sealed combustion. Not qualifying: Systems utilizing electric resistant heat, including baseboard and furnace, as the primary heat source.
5	HIGH EFFICIENCY WATER HEATING AND HIGH EFFICACY LIGHTING: Water heating system includes one of the following: Gas, propane, or oil water heater with a minimum EF of 0.80 or Electric Heat Pump Water Heater with a minimum EF of 1.15. and

	90% High efficacy lighting in accordance with Section R404.1
6	SOLAR HOT WATER Solar Domestic Hot Water with a minimum 0.4 Solar Fraction

Reason: This proposal increases the efficiency of new residential construction approximately 5% above that of a base-case residence meeting the 2012 IECC. The innovative feature of this proposal is the inclusion of menus from which users must pick a fixed number of items. This approach was successfully incorporated into the Oregon residential code and also is the basis for the Washington State residential code. There have been no problems to date implementing the Oregon code.

The current prescriptive format in the IECC has significant limitations on increases to residential building efficiency. Only minimal gains are available for envelope, mechanical, water heating, and lighting efficiency. In order for future versions of the IECC to advance increased efficiency in residential construction, new user-friendly and enforceable code formats must be considered. This proposed code format provides the following benefits:

- Provides flexibility for designers and builders;
- Contains a limited number of discrete option items that are understandable and enforceable which will result in high compliance rates.
- Has a proven track record in Oregon

The options in this table include technologies that are currently available in the market. The code user can have the option of increasing the efficiency of the building envelope, installing a more efficient heating and/or cooling system, or installing a more efficient water heating system or solar hot water systems. Projects that include a ground or water source heat pump system already are not required to select an additional option. Analysis of the energy savings for each of the features was taken from extensive work in developing the Washington State Points system or from ICF analysis.

Cost Impact: The code change proposal will increase the cost of construction but will reduce the cost of operation.

RE187-13

Public Hearing:	Committee:	AS	AM	D
	Assembly:	ASF	AMF	DF

R401.2-EC-MAKELA

RE188 – 13

R202 (NEW) (IRC N1101.9 (NEW)), R401.2 (IRC N1101.15), R406 (NEW) (IRC N1106 NEW)

Proponent: Eric Makela, Britt Makela Group, Inc., David Goldstein, National Resource Defense Council (Eric@BrittMakela.com)

Revise as follows:

R401.2 (N1101.15) Compliance. Projects shall comply with Sections identified as "mandatory" and with either sections identified as "prescriptive", ~~or~~ the performance approach in Section R405~~.~~ or an Energy Rating Index (ERI) approach in Section R406.

SECTION R406 (N1106)
ENERGY RATING INDEX COMPLIANCE ALTERNATIVE

R406.1 (N1106.1) Scope. This section establishes criteria for compliance using an Energy Rating Index analysis.

R406.2 (N1106.2) Mandatory requirements. Compliance with this section requires that the mandatory provisions identified in Section R401.2 and R403.4.2 be met. The building thermal envelope shall be greater than or equal to levels of efficiency and Solar Heat Gain Coefficient in Table 402.1.1 or 402.1.3 of the 2009 *International Energy Conservation Code.*

> **Exception:** Supply and return ducts not completely inside the building thermal envelope shall be insulated to a minimum of R-6.

R406.3 (N1106.3) Energy rating index. The energy rating index (ERI) shall be a numerical integer value that is based on a linear scale constructed such that the *ERI reference design* has an Index value of 100 and a residential building that uses no net purchased energy has an Index value of 0. Each integer value on the scale shall represent a one percent (1%) change in the total energy use of the *rated design* relative to the total energy use of the *ERI reference design*. The ERI shall consider all energy used in the residential building.

R406.3.1 (N1106.3.1) ERI reference design. The *ERI reference design* shall be configured such that is it meets the minimum requirements of the 2006 *International Energy Conservation Code* prescriptive requirements

The proposed residential building shall be shown to have an annual total normalized Modified Loads that are less than or equal to the annual total Loads of the *ERI reference design.*

R406.4 (N1106.4) ERI based compliance. Compliance based on an ERI analysis requires that the *rated design* be shown to have an ERI less than or equal to the appropriate value listed in Table R406.3, when compared to the *ERI reference design*.

TABLE R406.4 (N1106.4)
MAXIMUM ENERGY RATING INDEX

Climate Zone	Energy Rating Index
1	52
2	52
3	51
4	54
5	55

6	54
7	53
8	53

R406.5 (N1106.5) Verification by approved agency. Verification of compliance with Section R406 shall be completed by an *approved* third party.

R406.6 (N1106.6) Documentation. Documentation of the software used to determine the energy rating index and the parameters for the residential building shall be in accordance with Sections R406.6.1 through R406.6.3.

R406.6.1 (N1106.6.1) Compliance software tools. Documentation verifying that the methods and accuracy of the compliance software tools conform to the provisions of this section shall be provided to the *code official.*

R406.6.2 (N1106.6.2) Compliance report. Compliance software tools shall generate a report that documents that the energy rating index of the *rated design* complies with Sections R406.3 and R406.4. The compliance documentation shall include the following information:

1. Address or other identification of the residential building;
2. An inspection checklist documenting the building component characteristics of the *rated design*. The inspection checklist shall show results for both the *ERI reference design* and the *rated design,* and shall document all inputs entered by the user necessary to reproduce the results;
3. Name of individual completing the compliance report; and
4. Name and version of the compliance software tool.

Exception: Multiple orientations. When an otherwise identical building model is offered in multiple orientations, compliance for any orientation shall be permitted by documenting that the building meets the performance requirements in each of the four cardinal (north, east, south and west) orientations.

R406.6.3 (N1106.6.3) Additional documentation. The *code official* shall be permitted to require the following documents:

1. Documentation of the building component characteristics of the *ERI reference design.*
2. A certification signed by the builder providing the building component characteristics of the *rated design.*
3. Documentation of the actual values used in the software calculations for the *rated design.*

R406.7 (N1106.7) Calculation software tools. Calculation software, where used, shall be in accordance with Sections R406.7.1through R406.7.3.

R406.7.1 (N1106.7.1)Minimum capabilities. Calculation procedures used to comply with this section shall be software tools capable of calculating the energy rating index as described in Section R406.3, and shall include the following capabilities:

1. Computer generation of the *ERI reference design* using only the input for the *rated design.* The calculation procedure shall not allow the user to directly modify the building component characteristics of the *ERI reference design.*

2. Calculation of whole-building, as a single *zone,* sizing for the heating and cooling equipment in the *ERI reference design* residence in accordance with Section R403.6.

3. Calculations that account for the effects of indoor and outdoor temperatures and part-load ratios on the performance of heating, ventilating and air-conditioning equipment based on climate and equipment sizing.

4. Printed *code official* inspection checklist listing each of the *rated design* component characteristics determined by the analysis to provide compliance, along with their respective performance ratings.

R406.7.2 (N1106.7.2) Specific approval. Performance analysis tools meeting the applicable sections of Section R406 shall be *approved.* Tools are permitted to be *approved* based on meeting a specified threshold for a jurisdiction. The *code official* shall approve tools for a specified application or limited scope.

R406.7.3 (N1106.7.3) Input values. When calculations require input values not specified by Sections R402, R403, R404 and R405, those input values shall be taken from an *approved* source.

Add new definitions as follows:

RATED DESIGN. A description of the proposed building used to determine the energy rating index.

ERI REFERENCE DESIGN. A version of the *rated design* that meets the minimum requirements of the 2006 *International Energy Conservation Code.*

Reason: The residential provisions of the IECC allows for varying methods for demonstrating compliance with the code. This includes both a prescriptive and simulated performance option in addition to allowing efficiency programs that are designed to go above the minimum code levels as "deemed to comply" programs. These above code programs must be approved by the code official to be used in the jurisdiction. Alternative programs that depend on an Energy Rating Index (ERI) have been approved as an alternative code or above code program in at least 6 states and in over 130 jurisdictions. These types of programs typically take the form of a Home Energy Rating System (HERS) program. Under the current code there is no guidance on setting Energy Rating Index scores, which will lead to inconsistent application of these types of programs based on climate zones.

The goal of this proposal is to introduce an Energy Rating Index with established rating numbers into the code that will allow alternative programs to be designed to meet these criteria. The proposal provides guidelines for the development of the index, documentation provided to ensure compliance and a requirement that an approved 3rd party verify that the building complies with the applicable Energy Rating Index. The reference house is based on a home built to the 2006 IECC which is consistent with ERI based programs.

The 2009 IECC residential envelope requirements have been set as the least efficient level of efficiency for potential trade-offs to ensure that minimum levels of efficiency that have proven to be cost effective are installed in all buildings and that some flexibility is allowed in the approach to alternative designs. This proposal also requires complying with the applicable mandatory requirements to be consistent with the Above Code section in the IECC. And because energy losses in the domestic hot water distribution system fall outside the scope of the energy rating index as it can be calculated with 2013 methodology, current code provisions relating to hot water pipe insulation are mandatory as well. We anticipate that these requirements can be folded into the energy rating index for the 2018 IECC and thus removed from the mandatory sections then.

This proposal is intended to produce substantial additional energy savings compared to the current or proposed levels of prescriptive requirements in the 2015 IECC while allowing considerably greater flexibility to builders using a method with which a large segment of the market is already familiar. This flexibility is likely to result in lower construction costs for any given level of energy efficiency. Builders who do not make use of this proposed method are still able to comply with the Code can still use any of the existing compliance pathways.

Cost Impact: The code change proposal will not increase the cost of construction.

RE188-13

Public Hearing:	Committee:	AS	AM	D
	Assembly:	ASF	AMF	DF

R401.2-EC-GOLDSTEIN-MAKELA.DOC

RE189 – 13
R405.7 (NEW) (IRC N1105.7 (NEW))

Proponent: Craig Conner, Building Quality, representing self (craig.conner@mac.com)

Add new text as follows:

R405.7 (N1105.7) Optional performance compliance. This section establishes an alternative performance criteria. Compliance under Section R405.7 shall be as otherwise given in Section R405, except as specified in Section R405.7.

R405.7.1 (N1105.7.1) Annual energy cost. The annual energy cost for the proposed design shall be less than or equal to 98 percent of the annual energy cost for the standard reference design.

R405.7.2 (N1105.7.2) Modified standard reference design. Equipment efficiency in the standard reference design for Section R405.7 shall be modified as specified in Sections R405.7.2.1 through R405.7.2.3.

R405.7.2.1 (N1105.7.2.1) Heating. Electric heating systems shall utilize an air source heat pump with the efficiency of the prevailing federal minimum standard. Nonelectric furnace and boiler heating systems shall utilize the same fuel type as the proposed design with the efficiency of the prevailing federal minimum standard.

R405.7.2.2 (N1105.7.2.2) Cooling. Cooling systems shall be electric with the efficiency of the prevailing federal minimum standard.

R405.7.2.3 (N1105.7.2.3) Service water heating. Service water heating systems shall utilize the same fuel type as the proposed design with the efficiency of the prevailing federal minimum standard.

R405.7.3 (N1105.7.3) Modified mandatory requirements. The maximum envelope and duct leakage rates for the proposed design in Section R405.7 shall be as specified by R405.7.3.1 and R405.7.3.2. This section shall not modify the annual energy cost specified in Section R405.7.1.

R405.7.3.1 (N1105.7.3.1) Envelope leakage. The maximum building thermal envelop leakage rate shall be 7 air changes per hour at a pressure of 0.2 inches w.g (50 Pa).

R405.7.3.2 (N1105.7.3.2) Duct leakage. The maximum duct leakage shall be 8 cfm (113.3 L/min) per 100 square feet (9.29 m2) of conditioned floor area. Duct leakage shall be permitted to be measured as either total leakage or leakage to outside of conditioned space.

Reason: Many homeowners are interested in energy-efficient homes. Many builders are interested in constructing energy-efficient homes. Builders need to be permitted to construct homes that achieve the energy efficiency goal in the best way they know how.

The IECC's performance section has come to include artificial constraints that do not increase energy efficiency. At best these constraints force what some deem good energy-efficient design. At worst, these constraints are product manufacturer's attempts to increase their market share. The code should not determine the product market shares. Mandatory requirements should be driven by health, safety or durability. The overall energy use goal should be the main criteria for compliance based on performance.

This change makes three modifications to the performance calculation. This change allows the use of efficient heating, cooling, and service water heating equipment to achieve energy savings (new Section R405.7.2). This change relaxes the maximum envelope leakage and duct leakage requirements, without lowering the energy efficiency goals (R405.7.3). The energy costs allowed by the new R405.7 are reduced by 2% (R405.7.1).

The changes proposed here may be accomplished by other proposals. If so, this change would not be needed.

Cost Impact: This proposal adds options for cost-effective ways to achieve energy efficiency.

RE189-13

Public Hearing:	Committee:	AS	AM	D
	Assembly:	ASF	AMF	DF

R401.2 #2-EC-CONNER.DOC

RE190-13
R406 (New) (IRC N1106 (New))

Proponent: Robby Schwarz, EnergyLogic Inc., Representing EnergyLogic, Inc. (robby@nrglogic.com)

Add new text as follows:

SECTION R406 (N1106)
SIMULATED PERFORMANCE BY
INDEX SCORE METHOD
(PERFORMANCE)

R406.1 (N1106.1) Scope. The simulated performance index score method in Section R406 shall be used for determining that a building complies with this code. Such methods shall include a whole house energy analysis resulting in comparative index scores.

R406.2 (N1106.2) Mandatory requirements. Use of the simulated performance index score alternative method for compliance to this code shall require all of the following:

1. Design and construction of the building in compliance with sections in this code that are indicated as mandatory.
2. Inspections, required for the generation of an index score, are performed including, but not limited to, inspection, by the entity or person performing the energy analysis, of insulation systems and air barriers prior to concealment.
3. Supply and return ducts not completely inside the *building thermal envelope* are insulated with not less than an *R-value* of R-8.
4. Ductwork, that is either partially or completely within the thermal layer of the wall system of the *building thermal envelope,* shall have insulation of a *R-value* of not less than R-10 on the side of the duct that is away from the conditioned space. Where the duct is in a wall cavity and the R-10 insulation does not completely fill the cavity, the remaining cavity space shall be filled with insulation to the extent that the requirement for insulating the exterior wall of the building is met or the cavity space is completely filled, whichever is less. Ductwork, that is either partially or completely within the thermal layer of a floor system of the *building thermal envelope,* shall have insulation of a *R-value* of not less than R-19 on the side of the duct that is away from the conditioned space. Floor cavity insulation shall be installed in accordance with Section R402.2.7. Where the duct is in a floor cavity and the R-19 insulation does not completely fill the cavity, the remaining cavity space shall be filled with insulation to the extent that the requirement for insulating the floor system of the building is met or the cavity space is completely filled, which ever is less.

R406.3 (N1106.3) Performance-based compliance. The proposed building (*proposed design*) shall be complaint witht his code where the index score generated by the energy analysis is less than or equal to the index score of the *standard reference design*. The *standard reference design* index score shall be determined by analyzing a building of identical geometry to the proposed building that has the features indicated in the *standard reference design* column of Table R405.5.2(1). The index score of the proposed design shall be calculated in accordance with RESNET Standards.

R406.3.1 (N1106.3.1) Compliance software tools. Software tools used to determine code compliance by the simulated performance index score method shall be accredited by the Residential Energy Services Network organization. Documentation showing the software accreditation shall be provided to the *code official.*

R406.4 (N1106.4) Compliance report and other documentation. Compliance reports and other documentation shall be provided in accordance with Sections R406.4.1 through R406.4.3. A compliance

report on the *proposed design* shall be submitted with the application for the building permit. Upon completion of the building, a compliance report based upon the as-built condition of the building, shall be submitted to the *code official* before a certificate of occupancy is issued by the *code official*. Batch sampling of buildings to determine energy code compliance for all buildings in the batch shall be prohibited.

Compliance reports shall include information in accordance with Sections R405.4.2.1 and R405.4.2.2. Where the *proposed design* of a building could be built on different sites where the cardinal direction orientation of the building on each site is different, compliance of the *proposed design* for the purposes of the application for the building permit, shall be based upon the worst case orientation worst case configuration, worst case building air leakage and worse case duct leakage. Such worse case parameters shall be used as inputs to the compliance software for energy analysis.

R406.4.1 (N1106.4.1) Compliance report for permit application. A compliance report submitted with the application for building permit shall include all of the following:

1. Building street address, or other building site identification.
2. A statement indicating that the *proposed design* complies with Section R405.3.
3. An inspection checklist documenting the building component characteristics of the *proposed design* as indicated in Table R405.5.2(1). The inspection checklist shall show results for both the *standard reference design* and the *proposed design* with all user inputs to the compliance software to generate the results.
4. A site-specific energy analysis report that is in compliance with Section R405.3
5. Name of the individual performing the analysis and generating the report.
6. Name and version of the compliance software tool.

R406.4.2 (N1106.4.2) Compliance report for certificate of occupancy. A compliance report submitted for obtaining the certificate of occupancy shall include all of the following:

1. Building street address, or other building site identification
2. A statement indicating that the as-built building complies with Section R405.3.
3. A certificate indicating that the building meets the requirements of the home energy rating system, HERS, index matrix of the RESNET Standards for code compliance and the energy saving features of the buildings.
4. A site-specific energy analysis report that is in compliance with Section R405.3.
5. Name of the individual performing the analysis and generating the report.
6. Name and version of the compliance software tool.

R406.4.3 (N1106.4.3) Additional documentation. Upon request by the *code official,* the following documentation shall be provided along with compliance reports to the *code official*:

1. Documentation of the building component characteristics of the *standard reference design.*
2. A certification statement, signed by the builder, that lists the *proposed design* building component characteristics indicated in Table R405.5.2(1).

R406.5 (N1106.5) Calculation procedure. Calculations of the energy performance of a building design shall be in accordance with Sections R406.5.1 and R406.5.2.

R406.5.1 (N1106.5.1) Identical methods. The *standard reference design* and *proposed design* shall be configured and analyzed using identical methods and techniques to generate a separate index score for each configuration of the buildingThe methods and techniques shall be in accordance with the home energy efficiency rating system, HERS, guidelines in the RESNET Standards.

R406.5.2 (N1106.5.2) Building design specifications. The *standard reference design* and *proposed design* shall be configured and analyzed as indicated in Table R405.5.2(1).

R406.6 (N1106.6) Calculation software tools. Calculation software shall be in accordance with Sections R406.6.1 through R406.6.3.

R405.6.1 (N1106.6.1) Minimum capabilities. Software tools shall be capable of calculating the index score of all building elements that differ between the *standard reference design* and the *proposed design.* The software shall have the following capabilities:

1. Computer generation of a report for the *standard reference design* using only the input for the *proposed design.* The calculation software shall prohibit the user from directly modifying the building component characteristics of the *standard reference design.*
2. Calculation of whole-building sizing , as a single *zone,* for the heating and cooling equipment in the *standard reference design* building in accordance with Section R403.6.
3. Calculations that account for the effects of indoor and outdoor temperatures and part-load ratios on the performance of heating, ventilating and air-conditioning equipment based on climate and equipment sizing.
4. Printing an inspection checklist for the *code official* that lists the characteristic of each of the *proposed design* components indicated in Table R405.5.2(1) that was used to determine compliance. The component characteristics shall include the performamce rating for the component such as, but not limited to, *R-value*, *U-factor*, *SHGC*, heating seasonal performance factor-HSPF, annual fuel utilization efficiency-AFUE, seasonal energy efficiency ratio-SEER and energy factor-EF.

R406.6.2 (N1106.6.2) Specific approval. Energy performance analysis tools that do not have accreditation by the Residential Energy Services Network organization shall comply with all other requirements of Section 406 and such tools shall only be used where the tool is *approved*.

R406.6.3 (N1106.6.3) Input values. Where calculations or software programs require input values that are not specified in Sections R402, R403, R404, R405 and R406, the input values used shall be only from *approved* sources.

Add new standard to Chapter 5 as follows:

Residential Energy Services Network, Inc.
P.O. Box 4561
Oceanside, CA 92052-4561

RESNET

RESNET Standards-2013 RESNET Mortgage Industry National Home Energy Rating Standards.

Reason: The current annual energy cost matrix for demonstrating code compliance is flawed and may demonstrate that a house that should pass the energy code, based on actual geometry and energy specifications, may not only because the energy costs in a region have changed. More and more jurisdiction and builders across the country are turning to performance index scores to represent the efficiency of a home and to demonstrate code compliance. Performance scores in and of themselves do not necessarily demonstrate code compliance. However, if the score is imposed on the existing structure of the code as this new alternative compliance path section 406 does, the score can reflect code compliance simply as a means of demonstrating passing and failing.

The current structure of the simulated performance path requires that the mandatory sections of the IECC be complied with, thus ensuring that house performance is maintained and that the score is only a measure to demonstrate compliance. In addition, this new section 406 utilizes the code reference home as described in table 405.5.2(1) and therefore energy code compliance utilizing this pathway will have a score that is variable for each qualified home. This is accomplished through the 2015 IECC Reference Design outlined in table 405.5.2(1). When the builder's proposed designed home is configured with the IECC reference design features and modeled using approved software, the resulting score becomes the basis for the performance score target for that home.

The EPA Energy Star program and the DOE Challenge Home program utilize this same matrix for demonstrating qualification for their programs and have demonstrated that the compliance path described in this new section 406 will set the score target for the performance path equal to the performance that would be achieved if the prescriptive path was followed for each individual home.

In this way jurisdictions can avoid developing a fixed value, or performance index score, which really has no bearing on compliance and instead set the index score threshold required for energy code compliance at the same value that the same house would earn if configured to the IECC prescriptive path, as outlined in table 405.5.2(1) Reference Design.
** Footnote to Energy Star and DOE Challenge Home program documents

Jurisdiction, Builders, third party inspection companies and others are not clear of the process for completing and utilizing the simulated performance path. With all pathways through the energy code one must in essence declare how they will meet the intent of the code. For the prescriptive path they simply say they are going prescriptive, for the UA trade off path they submit a document such as a RESCheck report, and for the simulated performance path they must currently submit a document demonstrating that the annual energy cost of the proposed design are less than or equal to the same home if it were built with the reference design specification. It becomes unclear how one demonstrates that they have carried out their proposed design. The revisions proposed for this section clearly outlines a process by which the proposed design is submitted, inspections take place, and additional analysis is preformed to ensure that the proposed design was achieved or bettered for the purposes of compliance.

Field inspection, in order to create an accurate computer generated energy analysis, should be required for following reasons:

1. For production building a plan is often mastered and that one plan may be built over 100 times. To ensure that each house meets the performance analysis each home must be inspected.
2. Computer generated energy analysis' utilizes worst case configuration of the proposed design and requires evaluations and inputs that must be confirmed in the specific home that is built to ultimately determine if the actually built home meets the intent of the energy code. Examples of this are worst case air leakage and duct leakage numbers but also orientation, window square footage, number of bedrooms, and foundation type.
3. The reality is that houses built from a set of plans change. The actual built home may generally reflect the homes plans but window square footage, orientation, and even insulation and mechanical equipment are often different from what was proposed. The inspection process ensures that the energy analysis is address and site specific which ultimately ensures that the home that received its permit from the proposed design's energy analysis has carried out what they have proposed, which is to meet the intent of the code, even if each component of the home is not exactly the same as what was on the set of plans.

Cost Impact: The code change proposal will not increase the cost of construction more than is already done by the current section R405 simulated performance path.

Analysis: A review of the standards proposed for inclusion in the code, RESNET Standards, with regard to the ICC criteria for referenced standards (Section 3.6 of CP#28) will be posted on the ICC website on or before April 1, 2013.

RE190-13

Public Hearing:	Committee:	AS	AM	D
	Assembly:	ASF	AMF	DF

R406T (NEW)-EC-SCHARZ.DOC

RE191 – 13
R402.1.2, R402.1.4 (IRC N1102.1.2, N1102.1.4)

Proponent: Darren Meyers, P.E., International Energy Conservation Consultants, LLC, consultant to Illinois Energy Office – Department of Commerce & Economic Opportunity (dmeyers@ieccode.com)

Revise as follows:

R402.1.2 (N1102.1.2) Sum of the *R*-values ~~computation~~ of insulation only. Only the insulation material used in layers, such as framing cavity insulation and continuous insulating sheathing, shall be summed to compute the component *R*-value. The manufacturer's settled *R*-value shall be used for blown or loose-fill insulation. Computed *R*-values shall not include an *R*-value for other building materials or air films or the thermal bridging effects of framing materials. Fenestration *U*-factors and SHGC requirements shall comply with Table R402.1.1.

R402.1.3 (N1102.1.3)*U*-factor alternative. An assembly with a *U*-factor equal to or less than that specified in Table R402.1.3 shall be permitted as an alternative to the *R*-value in Table R402.1.1.

R402.1.4 (N1102.1.4)Total UA alternative. If the total *building thermal envelope* UA (sum of *U*-factor times assembly area) is less than or equal to the total UA resulting from using the *U*-factors in Table R402.1.3 (multiplied by the same assembly area as in the proposed building), the building shall be considered in compliance with Table R402.1.1. The UA calculation shall be done using a method consistent with the ASHRAE *Handbook of Fundamentals* with *R*-values and *U*-factors consistent with ASHRAE 90.1 Normative Appendix 'A', and shall include the thermal bridging effects of framing materials in accordance with ASHRAE 90.1, Normative Appendix 'A'. The *U*-factor and SHGC requirements shall be met in addition to UA compliance.

Reason: The additions further clarify the intentions of the framers of the 2004 IECC Supplement Edition that Section R402.1.2 expressly prohibits the use of computed R-values of materials "other than insulation as tested" in accordance with the U.S. Federal Trade Commission R-value Rule (CFR Title 16, Part 460) [R303.1.4], or framing correction factors rooted in accepted engineering practice and the use of *approved* consensus standards. This specifically precludes Authorities Having Jurisdiction from employing Section R102 "Alternate Materials and Methods" to permit a solicitor to gain advantage outside the public forum and debate of the *ICC Code Development Process for the International Codes* (CP-28), or through an ICC-ES-facilitated, environmental criteria, to condone the use of *R*-values for other building materials or air films or the thermal bridging effects of framing materials under IECC Section R402.1.2.

Reference to the ASHRAE 90.1 Standard establishes neutral measurements of the efficiency of thermal envelope components, either "as tested" in accordance with the U.S. Federal Trade Commission R-value Rule (CFR Title 16, Part 460) [R303.1.4], including ASHRAE's research into established framing correction factors based on in-situ studies and accepted engineering practice.

In February 2012, at the conclusion of Illinois' required 9-month review process of the 2012 IECC, the Illinois Energy Code Advisory Council (ECAC) performed an analysis of four (4) alternative proposals submitted the Coalition for Fair Energy Codes (CFEC). American Plywood Association (APA) Trustees representing structural panel producing members of the APA, and including participation by the American Wood Council (AWC) formed the coalition in January 2011 to address the perceived notion that the 2012 IECC has the potential to reduce annual demand for OSB and plywood wall sheathing by approximately 20 percent, or close to 1 billion sq. ft. in a normal housing demand year.

The premise of these proposals was to seek alternative criteria for various wall configurations on the basis of equivalence with the prescriptive residential building thermal envelope R-value requirements of Table 402.1.1 using R-value computations and framing correction factors unrecognized by Section 402.1.1.

It was the conclusion of IECC LLC that CFEC methodologies made use of assumptions predisposed to product-bias or preferential treatment of particular materials, or assemblies of materials, and were not, in the end, neutral measurements of the efficiency of thermal envelope components, either "as tested" in accordance with the U.S. Federal Trade Commission R-value Rule (CFR Title 16, Part 460) [R303.1.4], or based on accepted engineering practice and the use of *approved* consensus standards.

It was also the conclusion of Illinois ECAC that the CFEC approach sought to re-argue a few of the unsuccessful public comments in opposition to code change proposals (EC13-09/10 and EC47-09/10) debated in public forum at the *ICC Code Development Process for the International Codes*.

On May 31, 2012, the ICC-Evaluation Service (ICC-ES) issued a peculiar and lesser publicized 30-day request for comment on a proposal for a new environmental criteria under the alternative criteria process entitled: *Environmental Criteria for Determination of Opaque Framed Wall Assemblies Deemed as Equivalent to the Prescriptive Building Thermal Envelope Tables of the International Energy Conservation Code*® (Subject EC115-0612-R1).

At hearings of the ICC-ES Environmental Committee, held October 1, 2012 at the Hilton St. Louis Frontenac, the Environmental Committee approved Subject EC115-1012-R2 by a vote of 4 -2 with one vote In Abstentia, despite clear language in

Section 402.1.2 to the contrary, and Interpretations from ICC-ES's parent company, the International Code Council and its technical staff as follows:

2009 IECC, Section 402.1.2 - R-value Co

2009 IECC, Section 402.1.2 - R-value Co

2009 IECC, Sections 402.1.3-402.1.4 - U-

It was identified later that the proposal was solicited by Weyerhaeuser Company, one of the world's largest forest products companies, and a contributing company to CFEC.

In summary, without this change, the proposed Subject EC115, having been solicited by a proponent with bias, has the potential to create unnecessary loopholes and weaknesses in the *International Energy Conservation Code* (potentially dating to its former editions, circa IECC 2004). Furthermore, the proposed Subject EC115-0612-R1 could distance the IECC and Illinois (as with other states and U.S. territories adopting the 2009 or 2012 IECC Editions) from our Governors' assurances to the U.S. Department of Energy under Section 410 of the American Recovery and Reinvestment Act of 2009 (H.R. 1) (ARRA) as a condition of receiving funding for State Energy Programs (SEP).

Cost Impact: The code change proposal will not increase the cost of construction.

RE191-13

Public Hearing:	Committee:	AS	AM	D
	Assembly:	ASF	AMF	DF

R402.1.2-EC-MEYERS

RE192 – 13

R202, R403.5, R403.5.2 (New) through R403.5.7 (New) , Table R403.5.6(1) (New) (IRC Table N1103.5.6(1)(New), Table R403.5.6(2) (New)

Proponent: Darren Meyers, P.E., International Energy Conservation Consultants, LLC, consultant to Illinois Energy Office – Department of Commerce & Economic Opportunity (dmeyers@ieccode.com)

Revise as follows:

SECTION R202 GENERAL DEFINITIONS

LOCAL EXHAUST. An exhaust system that uses one or more fans to exhaust air from a specific room or rooms within a dwelling.

WHOLE HOUSE MECHANICAL VENTILATION SYSTEM. An exhaust system, supply system, or combination thereof that is designed in accordance with Section R403.5 to mechanically exchange indoor air for outdoor air when operating continuously or through a programmed intermittent schedule to satisfy the whole house ventilation rate. Outdoor air intakes and exhausts shall have automatic or gravity dampers that close when the ventilation system is not operating.

Revise as follows:

R403.5 Mechanical ventilation (Mandatory). The building shall be provided with ventilation that meets the requirements of ~~the *International Residential Code*~~ this section or for Group R-2, R-3 and R-4 buildings, ventilation that meets the requirements of the *International Mechanical Code*, as applicable. Outdoor air intakes and exhausts shall have automatic or gravity dampers that close when the ventilation system is not operating.

R403.5.1 Whole-house mechanical ventilation system fan efficacy. Mechanical ventilation system fans shall meet the efficacy requirements of Table R403.5.1.

Exception: Where mechanical ventilation fans are integral to tested and listed HVAC equipment, they shall be powered by an electronically commutated motor.

R403.5.2 Recirculation of air. Exhaust air from bathrooms and toilet rooms shall not be recirculated within a residence or to another *dwelling unit* and shall be exhausted directly to the outdoors. Exhaust air from bathrooms and toilet rooms shall not discharge into an *attic*, crawl space or other areas inside the building.

R403.5.3 Whole-house mechanical ventilation system. Whole-house mechanical ventilation systems shall be designed in accordance with Sections R403.5.4 through R403.5.6.

R403.5.4 System design. The whole-house ventilation system shall consist of one or more supply or exhaust fans, or a combination of such, and associated ducts and controls. Local exhaust or supply fans are permitted to serve as such a system. Outdoor air ducts connected to the return side of an air handler shall be considered to provide supply ventilation.

R403.5.5 System controls. The whole-house mechanical ventilation system shall be provided with controls that enable manual override.

R403.5.6 Mechanical ventilation rate. The whole house mechanical ventilation system shall provide outdoor air at a continuous rate of not less than that determined in accordance with Table R403.5.6(1).

> **Exception:** The whole-house mechanical ventilation system is permitted to operate intermittently where the system has controls that enable operation for not less than 25-percent of each 4-hour

segment and the ventilation rate prescribed in Table R403.5.6(1) is multiplied by the factor determined in accordance with Table R403.5.6(2).

TABLE R403.5.6(1)
CONTINUOUS WHOLE-HOUSE MECHANICAL VENTILATION SYSTEM AIRFLOW RATE REQUIREMENTS

DWELLING UNIT FLOOR AREA (square feet)	NUMBER OF BEDROOMS				
	0 – 1	2 – 3	4 – 5	6 – 7	> 7
	Airflow in CFM				
< 1,500	30	45	60	75	90
1,501 – 3,000	45	60	75	90	105
3,001 – 4,500	60	75	90	105	120
4,501 – 6,000	75	90	105	120	135
6,001 – 7,500	90	105	120	135	150
> 7,500	105	120	135	150	165

For SI: 1 square foot = 0.0929 m^2, 1 cubic foot per minute = 0.0004719 m^3/s.

[RMP] TABLE R403.5.6(2) (Table N1103.5.6(1))

INTERMITTENT WHOLE-HOUSE MECHANICAL VENTILATION RATE FACTORS[a, b]

RUN-TIME PERCENTAGE IN EACH 4-HOUR SEGMENT	25%	33%	50%	66%	75%	100%
Factor[a]	4	3	2	1.5	1.3	1.0

a. For ventilation system run time values between those given, the factors are permitted to be determined by interpolation.
b. Extrapolation beyond the table is prohibited.

R403.5.7 Local exhaust rates. *Local exhaust* systems shall be designed to have the capacity to exhaust the minimum air flow rate determined in accordance with Table R403.5.7.

TABLE R403.5.7
MINIMUM REQUIRED LOCAL EXHAUST RATES FOR ONE- AND TWO-FAMILY DWELLINGS

AREA TO BE EXHAUSTED	EXHAUST RATES
Kitchens	100 cfm intermittent or 25 cfm continuous
Bathrooms-Toilet Rooms	Mechanical exhaust capacity of 50 cfm intermittent or 20 cfm continuous

For SI: 1 cubic foot per minute = 0.0004719 m^3/s.

Reason: As of January 1, 2013, the state of Illinois has made effective the 2012 Illinois Energy Conservation Code (2012 ICC IECC) through the *Illinois Energy Efficient Building Act* [20 ILCS 3125], similar to what the States of Maryland and Minnesota, and various jurisdictions in Arizona (Glendale, Peoria, Pima County), Colorado (Vail), Kansas (Overland Park), Missouri (Kansas City), New Hampshire (Durham) and Texas (El Paso) have done … *[[Not an all-inclusive list.]]*

For Illinois, The Act takes precedence over home-rule declarations in our state; even those of the City of Chicago. However, The Act does not usurp municipal or county authority to adopt a building code, more specifically the *International Residential Code* (IRC). As such, and over Illinois' required 9-month review process of the 2012 IECC, the Illinois Energy Code Advisory Council (ECAC) concluded that a technical infeasibility would amount from adopting energy efficiency codes like the 2012 IECC which require whole-house mechanical ventilation, coupled with existing and/or delayed municipal ordinances tied to editions of the IRC prior to 2012. The 2012 IRC is the only edition of the IRC which provides a whole-house mechanical ventilation solution for homes with air leakage rates less than 5 ACH50.

Accordingly for Illinois adoption of the 2012 IECC, and we suspect other states and municipalities considering 2015 IECC adoptions, the economy, coupled with an overall lack of political will and municipal indifference to the mandatory residential sprinkler requirements of the 2009 and 2012 editions of the IRC, a disconnect results for new homes subject to 2012 IECC for air tightness (5

ACH50 or less)—thus, whole-house mechanical ventilation—and antiquated IRC editions which have not kept pace with this approach and the resultant whole-house mechanical ventilation solution.

In summary, this change merely reproduces the appropriate technical provisions and appropriate code development committee maintenance duties to the 2015 IECC.

Cost Impact: The code change proposal will not increase the cost of construction.

Analysis. The provisions in this proposal are duplicated from Section M1507.3. The proponent chooses to propose this change only to the IECC-R, and not Chapter 11 of the IRC, to avoid possible ~~coordination problems~~divergence of matching provisions already present within the IRC – For example, Section M1507.3 of the IRC.

RE192-13

Public Hearing:	Committee:	AS	AM	D
	Assembly:	ASF	AMF	DF

R403.5-EC-MEYERS

RE193 – 13
R202 (IRC N1101.9), 403.10 (New) (IRC N1103.10 (New))

Proponent: Darren Meyers, P.E., International Energy Conservation Consultants, LLC, consultant to Illinois Energy Office – Department of Commerce & Economic Opportunity (dmeyers@ieccode.com)

Revise as follows:

SECTION R202 (N1101.9)
GENERAL DEFINITIONS

COMBUSTION APPLIANCE ZONE (CAZ). A contiguous air volume within a building that contains a containing a Category I or II atmospherically-vented appliance or a Category III or IV direct vent or integral vent appliance drawing combustion air from inside of the building or dwelling unit. The CAZ includes but is not limited to, a mechanical closet, mechanical room, or the main body of a house or dwelling unit.

DRAFT. The pressure difference existing between the *appliance* or any component part and the atmosphere, that causes a continuous flow of air and products of *combustion* through the gas passages of the *appliance* to the atmosphere.

Mechanical or induced draft. The pressure difference created by the action of a fan, blower or ejector that is located between the *appliance* and the *chimney* or vent termination.

Natural draft. The pressure difference created by a vent or *chimney* because of its height, and the temperature difference between the *flue gases* and the atmosphere.

SPILLAGE. Combustion gases emerging from an appliance or venting system into the combustion appliance zone during burner operation.

Add new text as follows:

R403.10 (N1103.10) Worst-case testing of atmospheric venting systems. Buildings or dwelling units containing a Category I or II atmospherically-vented appliance; or a Category III or IV direct vent or integral vent appliance drawing combustion air from inside of the building or dwelling unit, shall have the Combustion Appliance Zone (CAZ) tested for spillage, acceptable draft and carbon monoxide (CO) in accordance with this Section. Where required by the *code official*, testing shall be conducted by an *approved* third party. A written report of the results of the test shall be signed by the party conducting the test and provided to the *code official*. Testing shall be performed at any time after creation of all penetrations of the *building thermal envelope* and prior to final inspection.

Exception: Buildings or dwelling units containing only Category III or IV direct vent or integral vent appliances that do not draw combustion air from inside of the building or dwelling unit.

1. The enumerated test procedure below shall be followed during testSet all combustion appliances to the pilot setting or turn off the service disconnects for all combustion appliances. Close all exterior doors and windows and the fireplace damper. With the building or dwelling unit in this configuration, measure and record the baseline ambient pressure inside the building or dwelling unit CAZ. Compare the baseline ambient pressure of the CAZ to that of the outside ambient pressure, and record the difference (Pa).
2. Establish worst case by turning on the *clothes dryer* and all exhaust fans. Close all interior doors that make the CAZ pressure more negative. Turn on the air handler, where present, and leave on if as a result, the pressure in the CAZ becomes more negative. Check interior door positions again, closing only the interior doors that make the CAZ pressure more negative. Measure net change in pressure from the CAZ to outdoor ambient pressure,

correcting for the base ambient pressure inside the home. Record "worst case depressurization" pressure and compare to Table R403.10(1).

3. Where CAZ depressurization limits are exceeded under worst-case conditions according to Table R403.10(1), additional combustion air must be provided or other modifications to building air-leakage performance or exhaust appliances such that depressurization is brought within the limits prescribed in Table R403.10(1).

TABLE R403.10(1) (N1103.10(1))
CAZ DEPRESSURIZATION LIMITS

VENTING CONDITION	LIMIT (Pa)
Category I, atmospherically-vented water heater	-2.0
Category I or II atmospherically-vented boiler or furnace common-vented with a Category I atmospherically-vented water heater	-3.0
Category I or II atmospherically-vented boiler or furnace, equipped with a flue damper, and common-vented with a Category I atmospherically-vented water heater	-5.0
Category I or II atmospherically-vented boiler or furnace alone	
Category I or II atmospherically-vented, fan-assisted boiler or furnace common-vented with a Category I atmospherically-vented water heater	
Decorative vented, gas appliance	
Power vented or induced-draft boiler or furnace alone, or fan assisted water heater alone	-15.0
Category IV direct vented appliances and sealed combustion appliances	-50.0

For SI: 6894.76 Pa = 1.0 psi.

1. Measure worst case spillage, acceptable draft, and carbon monoxide (CO) by firing the fuel-fired appliance with the smallest Btu capacity first.

a. Test for spillage at the draft diverter with a mirror or smoke puffer. An appliance that continues to spill flue gases for more than 60 seconds fails the spillage test.

b. Test for CO measuring undiluted flue gases, in the throat or flue of the appliance using a digital gauge in parts per million (ppm) at the 10 minute mark. Record CO ppm readings to be compared with Table R403.10(3) upon completion of Step 4. Where the spillage test fails under worst case, go to Step 4.

c. Where spillage ends within 60 seconds, test for acceptable draft in the connector no less than one foot, but no more than two feet downstream of the draft diverter. Record draft pressure and compare to Table R403.10(2).

d. Fire all other connected appliances simultaneously and test again at the draft diverter of each appliance for spillage, CO and acceptable draft using procedures 3a through 3c.

TABLE R403.10(2) (N1103.10(2))
ACCEPTABLE DRAFT TEST CORRECTION

OUTSIDE TEMPERATURE (°F)	MINIMUM DRAFT PRESSURE REQUIRED (Pa)
< 10	-2.5
10 – 90	(Outside Temperature ÷ 40) – 2.75
> 90	-0.5

For SI: 6894.76 Pa = 1.0 psi.

1. Measure spillage, acceptable draft, and carbon monoxide (CO) under natural conditions—without *clothes dryer* and exhaust fans on—according to the procedure outlined in Step 3, measuring the net change in pressure from worst case condition in Step 3 to natural in the CAZ to confirm the

worst case depressurization taken in Step 2. Repeat the process for each appliance, allowing each vent system to cool between tests.

2. Monitor indoor ambient CO in the breathing zone continuously during testing, and abort the test where indoor ambient CO exceeds 35 ppm by turning off the appliance, ventilating the space, and evacuating the building. The CO problem must be corrected prior to completing combustion safety diagnostics.
3. Make recommendations based on test results and the retrofit action prescribed in Table R40310.3).

TABLE R403.10(3) (N1103.10(3))
ACCEPTABLE DRAFT TEST CORRECTION

CARBON DIOXIDE LEVEL (ppm)	AND OR	SPILLAGE AND ACCEPTABLE DRAFT TEST RESULTS	RETROFIT ACTION
0 – 25	and	Passes	Proceed with work
25 < x ≤ 100	and	Passes	Recommend that CO problem be resolved
25 < x ≤ 100	and	Fails in worst case only	Recommend an appliance service call and repairs to resolve the problem
100 < x ≤ 400	or	Fails under natural conditions	**Stop!** Work shall not proceed until appliance is serviced and problem resolved
> 400	and	Passes	**Stop!** Work shall not proceed until appliance is serviced and problem resolved
> 400	and	Fails under any condition	**Emergency!** Shut off fuel to appliance and call for service immediately

Reason: Energy efficiency improvements often have a direct impact on the building pressure boundary affecting the safe operation of combustion equipment. Routinely sealing up buildings without looking at the combustion equipment risk sooner or later will result in harming someone with back-drafted flue gas conditions.

This proposal is intended to provide clear guidance to builders, code officials and home performance contractors for worst-case testing of atmospheric venting systems where air-sealing techniques and air-leakage performance testing requirements of the 2015 IECC are employed. Worst case testing is used by home performance contractors to identify problems that weaken draft and restrict combustion air. Worst case vent testing uses the home's exhaust fans, air handling appliances and chimneys to create worst case depressurization in the combustion appliance zone (CAZ).

Language that is proposed for R403.10 is basically a distilled version of predominant combustion safety test procedures for atmospherically vented appliances found in readily available home performance programs across the country, such as EPA's Healthy Indoor Environments Protocols, EPA's Home Performance with Energy Star, DOE's Workforce Guidelines for Home Energy Upgrades, HUD's Community Development Block Grants and Weatherization Assistance Programs, BPI's Technical Standards for the Building Analyst Professional, and RESNET's Interim Guidelines for Combustion Appliance Testing and Writing Work Scopes. The proposed language is intended to take the combustion safety test procedures that are used most commonly by these home performance, weatherization, and beyond code programs, and reduce them to their simplest and most straightforward form for the purpose of combustion safety in IECC compliance and field assessment through the use of building diagnostic tools.

For Illinois, our required 9-month review process of the 2012 IECC resulted in the Illinois Energy Code Advisory Council (ECAC) concluding that reductions in building envelope air-leakage from 7 ACH50 (2009 IECC) to 5 ACH50 was a more conservative approach to take for the construction industry in our state than the more "aggressive" 7 ACH50 (2009 IECC) to 3 ACH50, as is the case with the 2012 IECC for Climate Zones 4 and 5.

While part of ECAC's consideration was the decision to insert the 2012 IRC's whole-house ventilation provisions based on ASHRAE 62.2 directly into the Illinois Energy Conservation Code, this proposal recognizes that under certain conditions, perhaps even those of forthcoming 2015 IECC, reduced natural air-leakage coupled with the installation of atmospheric combustion appliances will reduce air exchange to the outside with the potential to contribute to poor indoor air quality and possible health problems due to spillage, inadequate draft, or carbon monoxide concerns.

We suspect other states and municipalities considering 2015 IECC adoptions will seek similar building diagnostic-based solutions to combustion safety.

Cost Impact: The code change proposal will increase the cost of construction.

RE193-13

Public Hearing:	Committee:	AS	AM	D
	Assembly:	ASF	AMF	DF

R403.10 (NEW)-EC-MEYERS